PACKAGED ROOF TOP UNIT SCHEDULE

(LENNOX MODELS TO BE SPECIFIED)
(LO NoX in California)

	UNIT SYMBOL	RTU 1 (NEW)	RTU 2 (NEW)	RTU 3 (NEW)
	LOCATION	ROOF	ROOF	ROOF
BLOWER	SA CFM (TONS)/ OA CFM	2,400 (6-TON)/ 500	4,000 (10-TON)/ 750	4,000 (10-TON)/ 750
	TSP (IN W.G.)	1.4" (0.88")	1.8" (1.24")	1.8" (1.24")
COOLING	TOTAL (BTU/HR)	72,400	115,000	115,000
	SENSIBLE (BTU/HR)	57,200	94,300	94,300
	AMBIENT (F)	95	100	100
	COIL ENTERING	67 WB/80 DB	67 WB/81 DB	67 WB/81 DB
	HEATING (ELECTRIC kW. BTU/HR)	15. 38,400	STAGE (2) 22.5. 57,700	STAGE (2) 22.5. 57,700
ELECTRICAL	POWER SUPPLY	208V/3Ph/60HZ	208V/3Ph/60HZ	208V/3Ph/60HZ
	COMPRESSOR (RLA)	19.6	(2) 27.0	(2) 27.0
	CONDENSER MOTOR (FLA)	(1) 2.4	(1) 4.8	(1) 4.8
	EVAPORATOR MOTOR (FLA)	4.6	10.6	10.6
	MIN. CIRCUIT AMPACITY	49, HACR = 50	72, HACR = 80	72, HACR = 80
	PANDA NATIONAL ACCOUNT. NO SUBSTITUTION ALLOWED. FOR PRICING AND ORDERS CONTACT LENNOX NA @ 800-367-6285 FOR INSTALLATION AND START-UP QUESTIONS CONTACT LENNOX NA TECH SUPPORT @ 800-367-6285 EXT. #1 FOR CUSTOMER SERVICE EXT. #2 FOR NAT ACC TECH SUPPORT EMAIL NATS@LENNOXIND.COM SUBJECT LINE: PANDA EXPRESS STORE NO.CITY, STATE	BY LENNOX MODEL KCB074S4T DOWN DISCHARGE COMPLETE WITH WIND RATED ROOF MOUNT CURB THYBAR NOA#16-0219.03, ELECTRONIC PROGRAMMABLE THERMOSTAT, SINGLE ENTHALPY ECONOMIZER WITH BAROMETRIC RELIEF. OPER. WT. : 858 LBS APPROX. IEER=15.0, EER=11.2	BY LENNOX MODEL KCB120S4M DOWN DISCHARGE COMPLETE WITH WIND RATED ROOF MOUNT CURB THYBAR NOA#16-0219.03, ELECTRONIC PROGRAMMABLE THERMOSTAT, SINGLEL ENTHALPY ECONOMIZER WITH BAROMETRIC RELIEF. OPER. WT. : 1,337 LBS APPROX. IEER=13.6, EER=11.2	BY LENNOX MODEL KCB120S4M DOWN DISCHARGE COMPLETE WITH WIND RATED ROOF MOUNT CURB THYBAR NOA#16-0219.03, ELECTRONIC PROGRAMMABLE THERMOSTAT, SINGLEL ENTHALPY ECONOMIZER WITH BAROMETRIC RELIEF. OPER. WT. : 1,337 LBS APPROX. IEER=13.6, EER=11.2

ALL ITEMS RELATED TO HVAC SYSTEM SHALL BE PROVIDED AND INSTALLED BY CONTRACTOR. CONTACT LENNOX REPRESENTATIVE ABOVE.
- THERMOSTATS: REMOTE SENSOR TYPE, 24/7 PROGRAMMABLE AND CAPABLE OF OPERATING ROOFTOP UNITS AND ACCESSORIES
- DUCT MOUNTED SMOKE DETECTORS: IONIZATION TYPE/UL LISTED

NOTE:
1. UNIT WEIGHTS ABOVE INCLUDE ACCESSORIES AND CURB.
2. FACTORY COATED EVAPORATOR COIL ON ALL UNITS
3. SINGLE ENTHALPY ECONOMIZER, HIGH PERFORMANCE, LOW-LEAK DAMPERS, W/ GRAVITY EXHAUST
4. TITLE 24 COMPLIANT
5. RETURN AIR SMOKE DETECTOR (FIELD INSTALLED)
6. FACTORY HINGED ACCESS DOORS
7. MERV 8 PLEATED FILTERS
8. MULTI SPEED (MSAV) BLOWER MOTORS
9. WIND RATED 14" ROOF CURB
10. COIL GUARDS (FIELD INSTALL)
11. FACTORY DISCONNECT
12. FACTORY GFCI (FIELD WIRED)
13. LENNOX COMMERCIAL CS7500 THERMOSTAT WITH REMOTE SENSOR (FIELD WIRED)
14. PROVIDE UNITS WITH HUMIDITROL DEHUMIDIFICATION OPTION, WITH COATED HUMIDITROL COIL
15. PROVIDE WATER LEVEL MONITORING DEVICE WITH ALARM AND SHUT-DOWN.

1

EXHAUST FAN SCHEDULE

	FAN NO.	EF 1	EF 2	EF 3
	LOCATION	ROOF	ROOF	ROOF
	AREA SERVED	KITCHEN GREASE EXHAUST HOOD #1	KITCHEN GREASE EXHAUST HOOD #2	RESTROOMS
	FAN DUTY	AIR EXHAUST	AIR EXHAUST	AIR EXHAUST
	FAN TYPE	CENTRIFUGAL BELT-DRIVEN	CENTRIFUGAL BELT-DRIVEN	CENTRIFUGAL BELT-DRIVEN
	FAN ARRANGEMENT	UPBLAST	UPBLAST	DOWNBLAST
	MIN. WHEEL DIAMETER	-	-	-
PERFORMANCE	C.F.M.	3,450	3,450	450
	T.S.P.	1.25"	1.25"	0.25"
	B.H.P.	1.38	1.38	0.085
	FAN R.P.M.	1223	1223	1128
MOTOR	MOTOR H.P.	2.0	2.0	0.25
	ELEC. CHARACTERISTICS	208V/3PH/60HZ	208V/3PH/60HZ	115V/1PH/60HZ
	MOTOR R.P.M.	1725	1725	-
	MOTOR SPECIAL FEATURES	OPEN DRIP-PROOF	OPEN DRIP-PROOF	OPEN DRIP-PROOF
	ACCESSORIES	1. VENTED ROOF CURB 2. HINGED AND CHAINED FAN INSTALLATION FOR DUCT ACCESS	1. VENTED ROOF CURB 2. HINGED AND CHAINED FAN INSTALLATION FOR DUCT ACCESS	1. ROOF CURB 2. BACKDRAFT DAMPER
	MANUFACTURER	CAPTIVEAIRE MODEL: EABDU18 WT. 222 LBS	CAPTIVEAIRE MODEL: EABDU18 WT. 222 LBS	CAPTIVEAIRE MODEL: EABDCR7 WT. 108 LBS

NOTES:

1. KITCHEN EXHAUST FANS SHALL BE ELECTRICALLY INTERLOCKED WITH MAKE-UP AIR UNIT AND ROOFTOP UNITS.
2. FOR WIRING DIAGRAM SEE 5/M-501

HVAC CONTROL SETTINGS

EACH HVAC UNIT SHALL BE PROVIDED WITH CONTROLS AS FOLLOWS:

THERMOSTAT: LENNOX COMMERCIAL PROGRAMMABLE THERMOSTAT WITH REMOTE TEMPERATURE SENSOR. SEE SHEET M-100 FOR THERMOSTAT AND SENSOR LOCATIONS.

ALL THERMOSTATS SHALL HAVE MANUAL OVERRIDE.

EACH UNIT CONTROL SHALL BE SET UP INITIALLY AS FOLLOWS:

CONTRACTOR SHALL DETERMINE OCCUPIED PERIOD FROM OWNER.

FAN OPERATION SHALL BE CONTINUOUS DURING OCCUPIED PERIOD AND CYCLE WITH COOLING/HEATING DURING UNOCCUPIED PERIOD.

PROGRAMMED SETPOINTS (FOR EACH THERMOSTAT):
COOLING OCCUPIED: 75°F.
COOLING UNOCCUPIED: 85°F.
HEATING OCCUPIED: 68°F.
HEATING UNOCCUPIED: 50°F.

NOTE: DEVIATIONS FROM THE ABOVE MAY RESULT IN UNACCEPTABLE AIR QUALITY, COMFORT AND/OR ENERGY CONSUMPTION.

AIR CURTAIN SCHEDULE

EQUIP.	MFR/MODEL	DESCRIPTION
M8A	MARS STD242-1U-OB	UNHEATED AIR CURTAIN (SERVICE DOOR). 115/1/60 WEIGHT 65 LBS. PROVIDED BY PANDA EXPRESS
M9A	QUICK-SERV CF-25	AIR CURTAIN (WINDOW NON-HEATED). 120/1/60, 20 AMP WEIGHT 30 LBS REFERENCE ARCHITECTURAL WINDOW SCHEDULE FOR HEATED OR NON-HEATED UNIT. PROVIDED BY GC.

NOTES:
INSTALL ACCORDING TO MANUFACTURER'S INSTRUCTIONS.

MA-1 CONTROL SETTINGS

EACH UNIT CONTROL SHALL BE SET UP INITIALLY AS FOLLOWS:

FAN OPERATION SHALL BE CONTINUOUS DURING COOKING OPERATION INTERLOCK WITH KITCHEN EXHAUST FANS. REFER TO HOOD DRAWINGS.

PROGRAMMED SETPOINTS :
COOLING : 85°F.
HEATING : 55°F.

EQ. NAME PLATES

A PERMANENT FACTORY-APPLIED NAME PLATE(S) SHALL BE AFFIXED TO THE APPLIANCES ON WHICH SHALL APPEAR IN LEGIBLE LETTERING, THE MANUFACTURER'S NAME OR TRADEMARK, MODEL NUMBER, SERIAL NUMBER AND SEAL OR MARK OF THE APPROVED AGENCY.

CODES AND STANDARDS

DESIGN AND INSTALLATION OF MECHANICAL SYSTEMS SHALL COMPLY WITH THE 2020 FLORIDA MECHANICAL CODE, THE 2020 FLORIDA ENERGY CONSERVATION CODE AND THE 2020 FLORIDA FUEL GAS CODE

1

MECHANICAL SPECIFICATIONS

1. WORK INCLUDES INSTALLATION OF HVAC SYSTEMS, INCLUDING GREASE EXHAUST FANS AND MAKE-UP AIR UNIT FOR KITCHEN HOODS, SPACE HEATING/AIR CONDITIONING SYSTEMS, SUPPLY, RETURN, EXHAUST, AND GREASE EXHAUST DUCTWORK, GRILLES, REGISTERS, DIFFUSERS, COMPLETE CONTROLS SYSTEM, INTERLOCK WIRING FOR OPERATION OF KITCHEN HOODS, EXHAUST FANS, AND MAKE-UP AIR UNIT, DUCT INSULATION, AND RELATED ITEMS NECESSARY FOR A COMPLETE FUNCTIONING SYSTEM AS INDICATED ON THE PLANS. FURNISH ALL NEW MATERIALS AND EQUIPMENT UNLESS NOTED OTHERWISE (U.N.O.).
2. DRAWINGS FOR HVAC WORK ARE DIAGRAMMATIC, SHOWING THE GENERAL LOCATION, TYPE, LAYOUT AND REQUIRED EQUIPMENT. DRAWINGS SHALL NOT BE SCALED FOR EXACT MEASUREMENTS. AS REQUIRED, REFER TO ARCHITECTURAL AND MANUFACTURER'S STANDARD INSTALLATION DRAWINGS FOR EQUIPMENT CONNECTIONS AND INSTALLATION REQUIREMENTS. FURNISH AND INSTALL DUCTWORK, CONNECTIONS, ACCESSORIES, OFFSETS, AND MATERIALS NECESSARY TO FACILITATE SYSTEM'S FUNCTIONING AS INDICATED BY THE DESIGN AND EQUIPMENT SHOWN ON PLANS.
3. CODE COMPLIANCE: ALL WORK COVERED BY THIS SECTION SHALL BE IN ACCORDANCE WITH ALL LOCAL CODES AND ACCEPTABLE TO THE AUTHORITY HAVING JURISDICTION.
4. COORDINATE WORK WITH OTHER TRADES. EQUIPMENT FURNISHED BY OTHERS AND OWNER REQUIREMENTS. PROVIDE DUCT RISES AND DROPS AS REQUIRED FOR INSTALLATION AND/OR TRADE COORDINATION. NOTIFY ARCHITECT OF ANY DISCREPANCIES BEFORE STARTING WORK. WORK SHALL BE PERFORMED BY EXPERIENCED TRADESMEN AND THEIR WORK SHALL BE OF HIGH STANDARD ACCEPTABLE TO THE OWNER.
5. DUCTWORK: DUCT SYSTEMS SHALL BE CONSTRUCTED, INSTALLED, SEALED AND INSULATED AS PROVIDED IN THE INT'L ENERGY AND MECHANICAL CODES. SHEET METAL SHALL BE IN ACCORDANCE WITH ASHRAE AND SMACNA STANDARDS. SHEET METAL SHALL BE GALVANIZED OF LOCK-FORMING QUALITY, ASTM A-525. UNLESS OTHERWISE NOTED, DUCT DIMENSIONS ON DRAWINGS ARE NET INSIDE CLEAR DIMENSIONS ON LINED DUCTS OR SHEET METAL DIMENSIONS ON UNLINED DUCTS. ALL ANGLE IRON USED FOR SUPPORT SHALL BE GALVANIZED. ROUND RIGID DUCTWORK SHALL CONFORM TO SMACNA TABLE 3-2.
6. INSTALL DUCT HIGH AS POSSIBLE WITHIN JOIST SPACE. CONSULT ARCHITECT AND ENGINEER FOR ALTERNATE ROUTING IF CONFLICT OCCURS.
7. SEAL ALL TRANSVERSE AND LONGITUDINAL DUCT SEAMS AIR-TIGHT. PROVIDE TURNING VANES AT ALL ELBOWS OR OFFSETS EXCEEDING 30 DEGREES.
8. GREASE EXHAUST SYSTEM: ALL GREASE EXHAUST DUCTS SHALL BE FABRICATED BY WELDED JOINT CONSTRUCTION OF 16 GAUGE WELDED STEEL OR 18 GAUGE STAINLESS STEEL. PROVIDE RATED ACCESS DOORS AT ALL ELBOWS AND OFFSETS NECESSARY FOR COMPLETE CLEANING OF GREASE DUCT. PROVIDE MINIMUM 30"x30" UNOBSTRUCTED ACCESS OR ROUTE FROM THE CEILING TO EACH ACCESS DOOR. DO NOT BLOCK ACCESS WITH PLUMBING, ELECTRICAL OR HVAC OBSTRUCTIONS. ALL ELBOWS SHALL BE LONG RADIUS. GREASE DUCT SHALL BE INSTALLED EITHER IN A RATED ENCLOSURE PROVIDED BY THE GENERAL CONTRACTOR OR WRAPPED WITH FIREMASTER GREASE DUCT WRAP.
9. DUCT INSULATION: PROVIDE DUCT WRAP FOR ALL DUCTS ABOVE CEILING, INCLUDING VERTICAL, HORIZONTAL, RIGID AND FLEXIBLE DUCTS, EXCLUDING PREFABRICATED PREINSULATED DUCTS AND GREASE DUCTS. DUCT WRAP SHALL BE JOHNS MANVILLE MICROLITE OR EQUAL WITH FOIL/SCRIM/KRAFT, 2 IN THICKNESS, 1.5 POUNDS/FT3 DENSITY, R-6 EQUIVALENT. DUCT WRAP SHALL BE BONDED GLASS FIBERS IN THERMOSETTING RESIN MEETING NFPA 90A, WITH K VALUE NOT TO EXCEED 0.23 AT 75 DEGREES F. FLAME SPREAD AND SMOKE DEVELOPED RATINGS SHALL NOT EXCEED 25/50. APPLY 100% ADHESIVE COVERAGE TO SHEET METAL DUCTWORK. PROVIDE ADDITIONAL MECHANICAL FASTENERS ON DUCTS OVER 12" WIDE OR 16" HIGH. MECHANICAL FASTENERS SHALL BE "GRIPNAIL" OR WELDED PIN AND SPEED CLIPS SPACED PER SMACNA STANDARDS.
10. FLEX DUCT: PROVIDE FACTORY ASSEMBLED CLASS 1 AIR DUCT (UL 181) WITH FIBERGLASS INSULATION, R-6 EQUIVALENT, AND REINFORCED OUTER PROTECTIVE COVER/VAPOR BARRIER. FLEX DUCT SHALL MEET NFPA 90A WITH FLAME SPREAD UNDER 25, SMOKE DEVELOPED UNDER 50 AND SHALL BE RATED FOR 2" W.C. PRESSURE AND 0 TO 250 DEGREE TEMPERATURE. FLEX DUCT MAXIMUM ALLOWED LENGTH TO BE PER LOCAL CODE.
11. PROVIDE INSULATION APPLIED TO COMPLETE BACKPAN OF AIR DEVICES.
12. ACCESS DOOR: PROVIDE HINGED ACCESS PANELS IN DUCTWORK WHERE SHOWN AND AS REQUIRED FOR ACCESS TO DAMPERS OR EQUIPMENT. PROVIDE INSULATED ACCESS DOORS IN INSULATED DUCTWORK.
13. AUTOMATIC TEMPERATURE CONTROL: CONTRACTOR TO PROVIDE AND INSTALL 24/7 PROGRAMMABLE THERMOSTATS AND REMOTE SENSORS.
14. KITCHEN HOOD EQUIPMENT INTERLOCK: PROVIDE ALL INTERLOCK AND CONTROL WIRING FOR KITCHEN HOOD SYSTEMS, WHICH INCLUDES EF1, EF2, MAU1 AND ANSUL SYSTEM SHUT DOWN INTERLOCK TO MAKE-UP AIR FAN. UPON ACTIVATION OF ANSUL SYSTEM, MAKE-UP AIR FAN SHALL BE DEACTIVATED. PROVIDE ALL NECESSARY CONTROLS AND WIRING FOR A COMPLETE AND OPERABLE SYSTEM. INTERLOCK GREASE EXHAUST FANS AND MAKE-UP AIR UNIT TO START SIMULTANEOUSLY FROM SWITCH PROVIDED AT HOOD.
15. TEST AND ADJUST EACH PIECE OF EQUIPMENT AND EACH SYSTEM AS REQUIRED TO ASSURE PROPER AIR BALANCE AND OPERATION. PROVIDE A CERTIFIED AIR BALANCE REPORT TO OWNER SHOWING DESIGN AND MEASURED AIR VOLUMES, STATIC PRESSURES, FAN RPMS, ETC. AIR BALANCE CONTRACTOR SHALL ADJUST SYSTEMS TO MINIMIZE NOISE AND VIBRATION, AND TO ASSURE PROPER FUNCTION OF CONTROLS, MAINTENANCE OF TEMPERATURE AND OPERATION. GENERAL CONTRACTOR TO OBTAIN ALL INSPECTIONS REQUIRED BY LOCAL CODE AND GUARANTEE WORK AND INSTALLATION FOR ONE YEAR AFTER ACCEPTANCE BY OWNER. GENERAL CONTRACTOR TO FURNISH OWNER WITH TWO COMPLETE SETS OF AS-BUILT DRAWINGS INDICATING ALL INSTALLED WORK, INCLUDING ALL CONTROL WIRING DIAGRAMS AND INTERLOCK FOR SYSTEM OPERATION.
16. CONTRACTOR SHALL BE RESPONSIBLE FOR INSTALLATION OF ECONOMIZERS INCLUDING INSTALLATION OF ALL NECESSARY SENSORS AND CONNECTIONS TO THERMOSTAT. PROVIDE SUPPORT OF ECONOMIZERS PER MANUFACTURER'S REQUIREMENTS AND TEST FOR PROPER OPERATION PRIOR TO FINAL TEST AND BALANCE.

MAKE-UP AIR UNIT SCHEDULE

MARK	MFR/ MODEL	LOCATION	SERVICE AREA	HEATING	TYPE	COOLING	CFM	ESP	MOTOR	REMARKS
MA-1	CAPTIVEAIRE EA3-D.500-G18-MPU	ROOF-TOP	KITCHEN HOOD #1 & #2	-	DX COOLED SUPPLY, DOWN DISCHARGE	DUAL CIRCUIT 5/5 MODULAR PACKAGED COOLING OPTION	5,520	0.75"	5 HP 208V/3PH/60HZ	MAKEUP AIR UNIT WITH (2) 24ABB360 5 TON, DUAL CIRCUIT AIR COOLED CONDENSING UNITS. REFER TO SHEET M-402 FOR INFORMATION. 4-5 WEEK LEAD TIME. SHIPPING INCLUDED IN PRICE. SHIPS FROM TYLER, TX. SHIPS SEPARATE, FREIGHT INCLUDED. NOTE: FACTORY OPTIONS SHALL INCLUDE NONCORROSIVE COATING AND HAIL GUARD PROTECTION.

DIFFUSER & GRILLE SCHEDULE

DESIGNATION	MANUFACTURER	MODEL NO	TYPE	COLOR	NOM NECK SIZE	NOM FACE SIZE	FRAME TYPE	NC MAX	REMARKS
A	TITUS	PMC3	PERFORATED MODULAR CORE	26 WHITE	14" x 14"	24" x 24"	LAY-IN T-BAR	< 30	INSULATION BLANKET FOR BACKPAN, CONTRACTOR FURNISHED ROUND NECK ADAPTER
B	TITUS	PMC-1C	PERFORATED MODULAR CORE	26 WHITE	12" x 12"	19" x 19"	SURFACE	< 30	AG95 OBD, (CONTRACTOR TO INSTALL INSULATED CEILING BOX 16"X16" ID)
C	TITUS	PMC-1C	PERFORATED MODULAR CORE	26 WHITE	8" x 8"	15" x 15"	SURFACE	< 30	AG95 OBD, (CONTRACTOR TO INSTALL INSULATED CEILING BOX 12"X12" ID)
D	TITUS	PAR-3	PERFORATED RETURN	26 WHITE	22" x 22"	24" x 24"	LAY-IN T-BAR	< 35	CONTRACTOR FURNISHED INSULATE RETURN BOX FOR CONNECTING FLEX DUCT
E	TITUS	PMR-1C	PERFORATED EXHAUST	26 WHITE	12" x 12"	15" x 15"	SURFACE		A95 OBD, (CONTRACTOR TO INSTALL INSULATED CEILING BOX 12"X12" ID)
F	TITUS	PAR-3	PERFORATED RETURN	PANDA BRONZE	22" x 22"	24" x 24"	LAY-IN T-BAR	< 35	CONTRACTOR FURNISHED INSULATE RETURN BOX FOR CONNECTING FLEX DUCT
H	TITUS	PMC-3	PERFORATED MODULAR CORE	PANDA BRONZE	14" x 14"	24" x 24"	LAY-IN T-BAR	< 30	AG95 OBD, INSULATION BLANKET FOR BACKPAN, CONTRACTOR FURNISHED ROUND NECK ADAPTER
J	TITUS	PMC-3	PERFORATED MODULAR CORE	26 WHITE	8" x 8"	24" x 24"	LAY-IN T-BAR	< 30	AG95 OBD, INSULATION BLANKET FOR BACKPAN, CONTRACTOR FURNISHED ROUND NECK ADAPTER

NOTE: PROVIDE FACTORY INSTALLED BACK PAN INSULATION ON AIR DEVICES.
HVAC CONTRACTOR IS TO PURCHASE ALL AIR DEVICES FROM PANDA APPROVED NATIONAL ACCOUNT VENDOR THERMAIR SYSTEMS INC.
PLEASE CONTACT RON CAMPTON AT 602-705-5010 OR EMAIL ronc@thermairsystems.com

MECHANICAL LEGEND

SYMBOL	ABBREVIATION	DESCRIPTION
	ABV	ABOVE
	AFF	ABOVE FINISHED FLOOR
	CLG	CEILING
	DN	DOWN
		DUCT SECTIONS (SUPPLY, EXHAUST, RETURN)
		FLEXIBLE DUCT
	MVD	MANUAL VOLUME DAMPER
	OBD	OPPOSED BLADE DAMPER
	MFR	MANUFACTURER
	MIN	MINIMUM
	OSA	OUTSIDE AIR
		ROUND RIGID DUCTWORK
	TSP	TOTAL STATIC PRESSURE
		TURNING VANES
1		CONSTRUCTION NOTES
EF 1		MECHANICAL EQUIPMENT DESIGNATION
S		SMOKE DETECTOR
T 1		THERMOSTAT / UNIT
R 1		REMOTE SENSOR / UNIT

AIR BALANCE SCHEDULE

ITEM	SUPPLY AIR	RETURN AIR	MAKE-UP AIR	EXHAUST
MAU1	0	0	+5,520	0
EF-1, EF-2	0	0	0	-3,450 x 2
RTU-1	+2,000	-1,500	500	0
RTU-2, RTU-3	+4,000, +4000	-3,250, -3,250	2@750 EA	0
EF-3	-	-	-	-450
TOTAL	+10,000	-8,000	+7,520	-7,350

BUILDING PRESSURE = +170 CFM

BALANCE TOLERANCES AS FOLLOWS:
KITCHEN EXHAUST HOODS: 0% TO +10%
OUTDOOR AIR: 0% TO +10%
SUPPLY & RETURN DIFFUSERS: ±10%
TOILET EXHAUST: ±10%
BALANCE RTU SUPPLY AND RETURN PRIOR TO TURNING ON EXHAUST FANS.
KITCHEN EXHAUST FANS SHALL BE BALANCED WITH VELOCITY MATRIX OR A 4" ANEMOMETER

OSA VENTILATION CALCULATION-IMC

AREA TYPE	TOTAL AREA (FT^2)	OCCUPANCY DENSITY ($_2$ (PEOPLE/FT^2))	TOTAL OCCUPANTS	OSA REQ.'D PER SQ.FT. (CFM)	OSA REQ.'D PER PERSON (CFM)	OSA REQ.'D FOR THIS OCCUPANCY CLASSIFICATION (CFM)
HALLWAYS	31	-	-	0.06	-	+2
STORAGE	14	-	-	0.15	-	+3
KITCHEN (EXHAUST)	247	-	-	0.7	-	-173
DINING ROOM	974	100/1,000	98	0.18	7.5	+911

CALCULATION PER IMC TABLE 403.3.1.1
VENTILATION SHALL BE BALANCED BY AN APPROVED METHOD. A BALANCE REPORT SHALL VERIFY THAT THE VENTILATION SYSTEM IS CAPABLE OF SUPPLYING THE AIRFLOW RATES REQUIRED BY SECTION 403. SAID REPORT MUST BE PRESENTED TO THE ADMINISTRATIVE AUTHORITY.

TOTAL OSA REQUIRED (CFM)	916
TOTAL OSA PROVIDED (CFM)	2000

PANDA EXPRESS CHINESE KITCHEN

PANDA RESTAURANT GROUP INC.
1683 Walnut Grove Ave.
Rosemead, California
91770
Telephone: 626.799.9898
Facsimile: 626.372.8288

All ideas, designs, arrangement and plans indicated or represented by this drawing are the property of Panda Express Inc. and were created for use on this specific project. None of these ideas, designs, arrangements or plans may be used by or disclosed to any person, firm, or corporation without the written permission of Panda Express Inc.

REVISIONS:

1	06.04.2021 ISSUE FOR BID

ISSUE DATE:

1	04.29.2021 ISSUE FOR PERMIT
2	06.04.2021 ISSUE FOR BID

DRAWN BY: SDT

PANDA PROJECT #: - S8-22-D8135
C&P PROJECT #: - 2200775

Cuhaci & Peterson
Architects Engineers Planners
2600 Maitland Center Pkwy. Maitland, FL 32751
P (407) 661-9100
F (407) 661-9101
www.c-p.com
Florida Corporate Certificate #AA C000526

06.04.2021

PANDA EXPRESS

TRUE WARM AND WELCOME 2300
SKYBROOKE BOULEVARD & STATE ROAD 54
LUTZ, FL 33558

M-000

MECHANICAL NOTES
SPECIFICATIONS & SCHEDULES

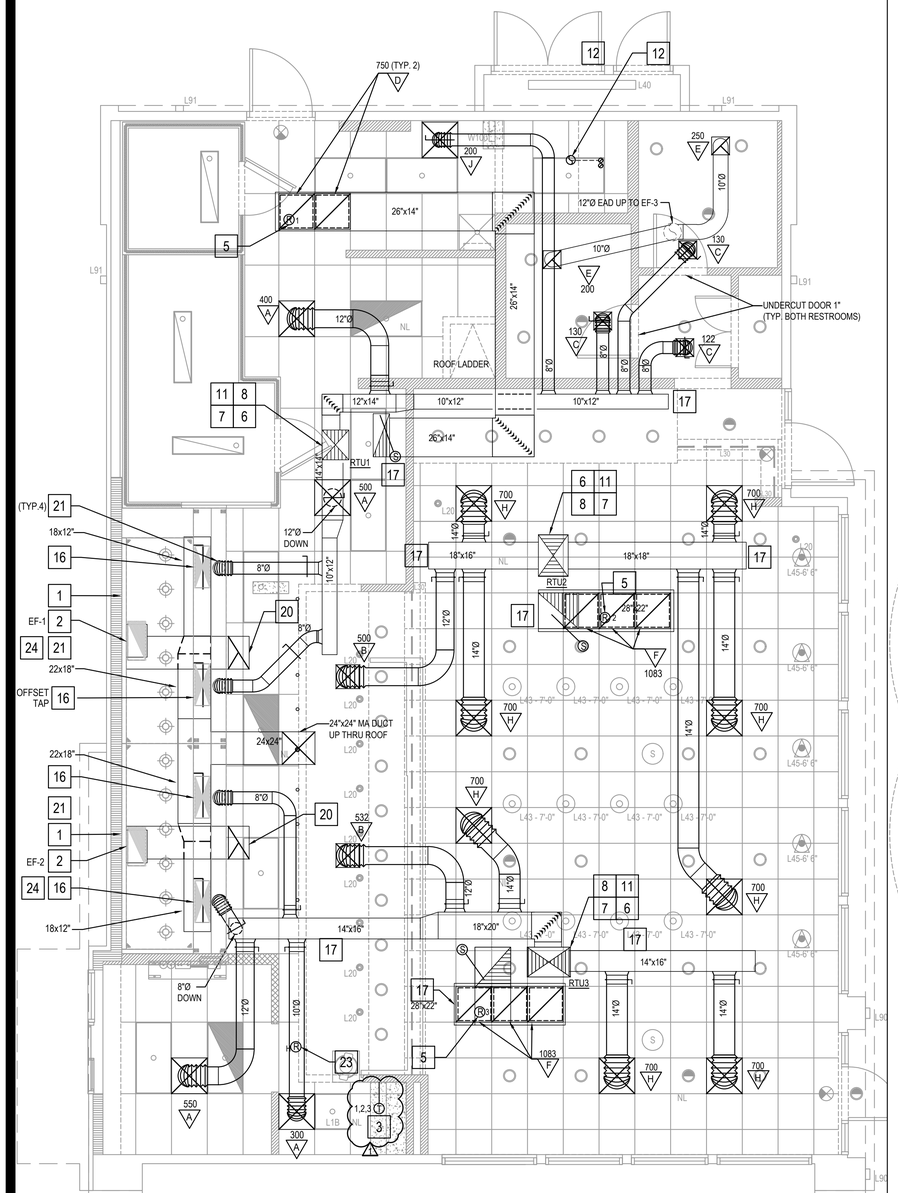

HVAC FLOOR PLAN 2

Scale:1/4"=1'-0" M-100

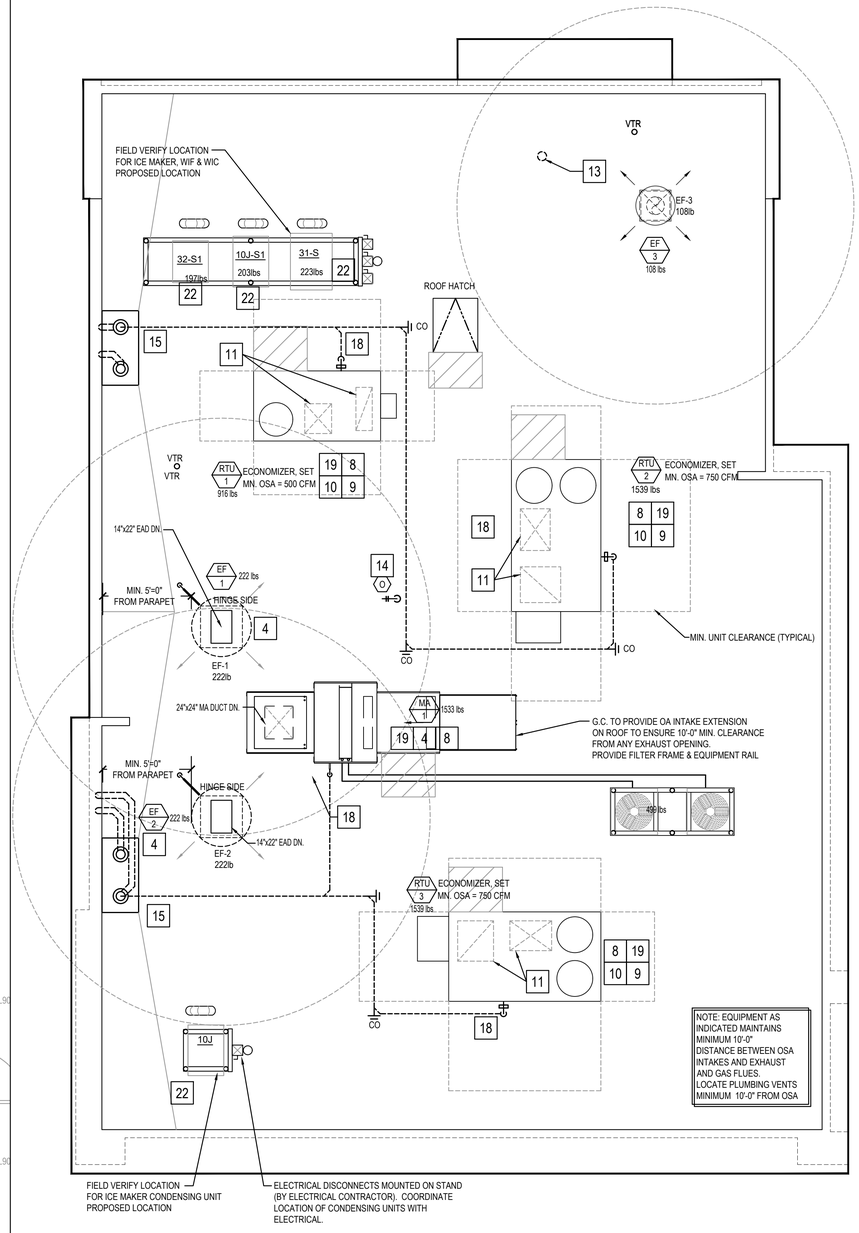

HVAC ROOF PLAN 1

Scale:1/4"=1'-0" M-100

MECHANICAL KEY NOTES:

1. INSTALL GREASE EXHAUST HOODS FURNISHED BY PANDA. HOOD SHALL BE ONE CAPTIVEAIRE 4824-ND HOOD EXHAUSTING 3,450 CFM. SUPPORT FROM STRUCTURE ABOVE WITH UNISTRUT AND ALL THREAD ROD. MOUNT HOOD PER LOCAL CODE REQUIREMENTS. REFER TO PLAN FOR HOOD CONNECTIONS. SEE CODE COMPLIANCE DRAWINGS ON SHEET M-500 AND CAPTIVEAIRE HOOD DRAWINGS FOR ADDITIONAL REQUIREMENTS. (TWO SECTIONS TOTAL).
2. PROVIDE AND INSTALL 22"x14" GREASE EXHAUST DUCT, ROUTE ON TOP OF MAKE UP AIR DUCT, FROM INLET OF ROOF MOUNTED GREASE EXHAUST FAN, CONNECT TO EXHAUST HOOD COLLAR, FIELD VERIFY.WRAP WITH THERMAL CERAMIC FIREMASTER DUCT WRAP+ OR EQUAL. FABRICATE DUCT FROM 16 GAUGE STEEL WITH WELDED SEAM CONSTRUCTION SEAL TO THE ROOF CURB WITH FIRE CAULKING . SEE HOOD DETAIL DRAWINGS ON SHEET M-500 AND CAPTIVEAIRE DRAWINGS.
3. MOUNT THERMOSTAT AT MANAGER STATION. REFER TO DETAIL #1 ON SHEET E-200. SEE DWG FOR EXACT LOCATION OF REMOTE SENSOR. SEE ROOFTOP UNIT SCHEDULE AND TEMPERATURE CONTROL DIAGRAM DETAIL 5 ON SHEET M-501 FOR ADDITIONAL INFORMATION. CONFIGURE THE LENNOX CS7500 STAT FOR A 20K SENSOR THROUGH THE THERMOSTAT MENU
4. INSTALL GREASE EXHAUST FAN WITH CURB (EF-1 AND EF-2) AND MAKE UP AIR (MA-1) FURNISHED BY PANDA. COORDINATE LOCATION OF UNIT WITH ARCHITECTURAL AND STRUCTURAL DRAWINGS.
5. PROVIDE AND INSTALL A REMOTE SENSOR FOR ROOFTOP UNIT AT THIS LOCATION. MOUNT REMOTE SENSOR IN RETURN AIR DUCTWORK. SEE TEMPERATURE CONTROL DIAGRAM ON SHEET M-501 FOR ADDITIONAL INFORMATION.
6. PROVIDE AND INSTALL DUCT MOUNTED SMOKE DETECTOR AT MAIN SUPPLY AIR DUCT PER UMC, SEC. 609. OR AT RETURN AIR DUCT PER IMC, SECTION 606.2.1. DETECTORS SHALL BE INTERLOCKED TO SHUT DOWN ROOFTOP UNITS UPON DETECTION OF SMOKE. PROVIDE ALL CONTROL WIRING NECESSARY TO PERFORM THIS OPERATION.
7. PROVIDE FLEXIBLE CONNECTION BETWEEN UNIT, ROUTE DUCT THRU ROOF CURB AND TRUSS.
8. FOR GAS OR WATER CONNECTION, SEE PLUMBING DRAWINGS.
9. PROVIDE FABRICATED CURB PER MANUFACTURERS REQUIREMENTS AND COORDINATE EXACT LOCATION OF UNIT IN FIELD. SHIM ROOF CURB LEVEL FOR PROPER CONDENSATE DRAINAGE.
10. FURNISH AND INSTALL ALL TEMPERATURE CONTROL WIRING FROM THE UNIT TO THE THERMOSTAT OR OTHER CONTROL DEVICES.
11. FULL SIZE SA AND RA UP TO RTU. TRANSITION AS REQUIRED TO RTU INLET/OUTLET SIZE.
12. PVC COMBINATION VENT AND COMBUSTION AIR PIPING PROVIDED AND INSTALLED BY PLUMBING FOR SEALED COMBUSTION WATER HEATER. REFER TO PLUMBING PLANS.
13. WATER HEATER CONCENTRIC VENT TERMINATION. REFER TO PLUMBING PLANS. OFFSET AS REQUIRED FOR CLEARANCE FROM AIR INTAKES.
14. ROOF HYDRANT. REFER TO PLUMBING DRAWINGS.
15. ROUTE CONDENSATE DRAIN IN CEILING SPACE OVER AND DOWN IN PRIMARY ROOF DRAIN(S). SLOPE 1/4" PER FOOT.
16. MA DUCT (BELOW MAKE UP AIR) CONNECT TO 28"x10" RISER FROM SUPPLY PLENUM. 1,380 CFM
17. PROVIDE DUCT EXTERNAL INSULATION WRAP AT TRUNK, TYPICAL.
18. CONDENSATE DRAIN LINE DOWN THRU ROOF. REFER TO DETAIL 16/P-500.
19. PROVIDE AND INSTALL ALL EQUIPMENT WITH MANUFACTURER'S RECOMMENDED CLEARANCES FOR MAINTENANCE. MAINTAIN MINIMUM CLEARANCES TO ELECTRICAL AND SERVICE ACCESS PANELS AND DISCONNECTS.
20. GREASE DUCT CLEANOUT LOCATION. PROVIDE ACCESS TO CLEANOUT ABOVE CEILING. REFER TO MECHANICAL SPECIFICATIONS SHEET M-000
21. 8" CONNECTION TO HOOD RTU SUPPLY PLENUM COLLAR. BALANCE TO 259 CFM.
22. PROVIDE AND INSTALL ACR TUBING, SIZED AND ROUTED PER MANUFACTURER'S INSTRUCTIONS, FROM REMOTE REFRIGERANT CONDENSERS TO WALK-IN COOLER AND FREEZER FAN COILS, AND ICE MAKER. TEST, PURGE, EVACUATE AND CHARGE LINES AS REQUIRED BY MANUFACTURER. (START-UP FOR ICE MAKER IS BY OWNER'S REPRESENTATIVE). ROUTE REFRIGERANT LINES THROUGH "ATR HUB" PROVIDED AND INSTALLED BY GC (REFER TO ARCH. ISO 3 AND 4, SHEET A-108).
23. ROOM AIR SENSOR FROM CAPTIVEAIRE HOOD ON BACK OF MENU BOARD WALL, AS CLOSE TO CEILING AS POSSIBLE.
24. PREFABRICATED GREASE EXHAUST DUCT AVAILABLE AS OPTIONAL ALTERNATIVE TO FIELD FABRICATED GREASE DUCT. SEE HOOD PLANS.

NOTE: MAXIMUM FLEXIBLE DUCT LENGTH ALLOWED SHALL BE PER LOCAL CODE AND AMENDMENTS.

PANDA RESTAURANT GROUP INC.
1683 Walnut Grove Ave.
Rosemead, California
91770
Telephone: 626.799.9898
Facsimile: 626.372.8288

All ideas, designs, arrangement and plans indicated or represented by this drawing are the property of Panda Express Inc. and were created for use on this specific project. None of these ideas, designs, arrangements or plans may be used by or disclosed to any person, firm, or corporation without the written permission of Panda Express Inc.

REVISIONS:

1	06.04.2021 ISSUE FOR BID

ISSUE DATE:

1	04.29.2021 ISSUE FOR PERMIT
2	06.04.2021 ISSUE FOR BID

DRAWN BY: SDT

PANDA PROJECT #: - S8-22-D8135
C&P PROJECT #: - 2200775

Cuhaci & Peterson
Architects Engineers Planners
2600 Maitland Center Pkwy. Maitland, FL 32751
P (407) 661-9100
F (407) 661-9101
www.c-p.com
Florida Corporate Certificate AAA C000526

06.04.2021

PANDA EXPRESS

TRUE WARM AND WELCOME 2300
SKYBROOKE BOULEVARD & STATE ROAD 54
LUTZ, FL 33558

M-100

H.V.A.C. FLOOR PLAN &
H.V.A.C. ROOF PLAN

TRUE WARM & WELCOME 2300 R4

FOR QUESTIONS, CALL THE
Southern California Office
Alberto Hernandez
PHONE: (714) 957-1500
EMAIL: reg86@captiveaire.com

PATENT NUMBERS

AC-PSP (UNITED STATES) - US PATENT 7963830 B2.
AC-PSP WALL (CANADA) - CA PATENT 2820509.
AC-PSP ISLAND (CANADA) - CA PATENT 2520330.

HOOD INFORMATION – JOB#4748429

HOOD NO	TAG	MODEL	MANUFACTURER	LENGTH	MAX COOKING TEMP	TYPE	APPLIANCE DUTY	DESIGN CFM/FT	TOTAL EXH CFM	EXHAUST PLENUM							MUA CFM	AC CFM	HOOD CONSTRUCTION	HOOD CONFIG	
													RISER(S)								
										WIDTH	LENG	HEIGHT	DIA	CFM	VEL	SP				END TO END	ROW
1		4824 ND-2-ACPSP-F	CAPTIVEAIRE	11' 6"	600 DEG	I	HEAVY	300	3450	14"	22"	4"		3450	1613	-0.559"	2760	518	430 SS WHERE EXPOSED	LEFT	ALONE
2		4824 ND-2-ACPSP-F	CAPTIVEAIRE	11' 6"	600 DEG	I	HEAVY	300	3450	14"	22"	4"		3450	1613	-0.559"	2760	518	430 SS WHERE EXPOSED	RIGHT	ALONE

HOOD INFORMATION

HOOD NO	TAG	FILTER(S)					LIGHT(S)			UTILITY CABINET(S)						FIRE SYSTEM PIPING	HOOD HANGING WEIGHT
												FIRE SYSTEM		ELECTRICAL	SWITCHES		
		TYPE	QTY	HEIGHT	LENGTH	EFFICIENCY @ 7 MICRONS	QTY	TYPE	WIRE GUARD	LOCATION	SIZE	TYPE	SIZE	MODEL #	QUANTITY		
1		SS BAFFLE WITH HANDLES	8	20"	16"	30%	6	L55 SERIES E26	NO	WALL MNT	12"x54"x24"	ANSUL R102	3.0/3.0/3.0	SC-321110MA-SEP	1 LIGHT 1 FAN	YES	601 LBS
2		SS BAFFLE WITH HANDLES	8	20"	16"	30%	6	L55 SERIES E26	NO	RIGHT	20"x48"x24"					YES	691 LBS

HOOD OPTIONS

HOOD NO	TAG	OPTION
1		LEFT END STANDOFF 3" WIDE 48" LONG.
		RISER SENSOR INSTALL 6IN PLEN.
2		RISER SENSOR INSTALL 6IN PLEN.

PERFORATED SUPPLY PLENUM(S)

HOOD NO	TAG	POS	LENGTH	WIDTH	HEIGHT	TYPE	RISER(S)				
							WIDTH	LENG	DIA	CFM	SP
1		Front	141"	22"	6"	MUA	10"	28"		1380	0.696"
						MUA	10"	28"		1380	0.696"
						AC			8"	259	0.160"
						AC			8"	259	0.160"
2		Front	158"	22"	6"	MUA	10"	28"		1380	0.696"
						MUA	10"	28"		1380	0.696"
						AC			8"	259	0.145"
						AC			8"	259	0.145"

WALL-MOUNT UTILITY CABINET

HOOD NO	LOCATION	SIZE	UTILITY CABINET(S)				WEIGHT
			FIRE SYSTEM		ELECTRICAL	SWITCHES	
			TYPE	SIZE	MODEL #	QUANTITY	
1	WALL MNT	12"x54"x24"	ANSUL R102	3.0/3.0/3.0	SC-321110MA-SEP	1 LIGHT 1 FAN	305.00 LBS

FIRE SYSTEM INFORMATION – JOB#4748429

FIRE SYSTEM NO	TAG	TYPE	SIZE	FLOW POINTS	INSTALLATION	
					SYSTEM	LOCATION ON HOOD
1		ANSUL R102	3.0/3.0/3.0	23	WALL UTILITY CABINET LEFT	N/A

HOOD CORNER
HANGING ANGLE
(HARDWARE BY INSTALLER)

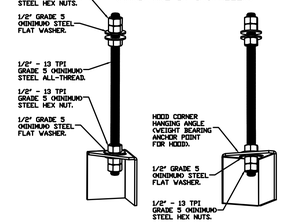

ASSEMBLY INSTRUCTIONS

HANGING ANGLE MUST BE SUPPORTED WITH 1/2" - 13 TPI GRADE 5 (MINIMUM) ALL-THREAD. SANDWICH HANGING ANGLES AND CEILING ANCHOR POINTS WITH 1/2" GRADE 5 (MINIMUM) STEEL FLAT WASHERS AND 1/2" - 13 TPI GRADE 5 (MINIMUM) HEX NUTS AS SHOWN. MUST USE DOUBLED HEX NUT CONFIGURATION BENEATH HOOD HANGING ANGLES AND ABOVE CEILING ANCHORS. MAINTAIN 1/4" OF EXPOSED THREADS BENEATH BOTTOM HEX NUT. TORQUE ALL HEX NUTS TO 57 FT-LBS.

FULL LENGTH
HANGING ANGLE
(HARDWARE BY INSTALLER)

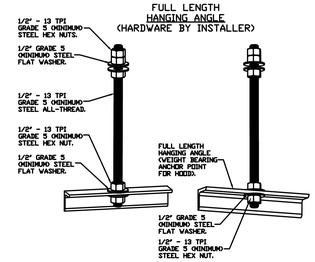

ASSEMBLY INSTRUCTIONS

HANGING ANGLE MUST BE SUPPORTED WITH 1/2" - 13 TPI GRADE 5 (MINIMUM) ALL-THREAD. SANDWICH HANGING ANGLES AND CEILING ANCHOR POINTS WITH 1/2" GRADE 5 (MINIMUM) STEEL FLAT WASHERS AND 1/2" - 13 TPI GRADE 5 (MINIMUM) HEX NUTS AS SHOWN. MUST USE DOUBLED HEX NUT CONFIGURATION ABOVE CEILING ANCHORS. SINGLE HEX NUT BENEATH HANGING ANGLE IS ACCEPTABLE FOR FULL LENGTH HANGING ANGLES. MAINTAIN 1/4" OF EXPOSED THREADS BENEATH BOTTOM HEX NUT. TORQUE ALL HEX NUTS TO 57 FT-LBS.

SUPPLY PLENUM
HANGING ANGLE
(HARDWARE BY INSTALLER)

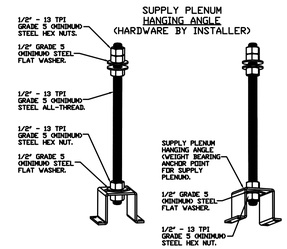

ASSEMBLY INSTRUCTIONS

HANGING ANGLE MUST BE SUPPORTED WITH 1/2" - 13 TPI GRADE 5 (MINIMUM) ALL-THREAD. SANDWICH HANGING ANGLES AND CEILING ANCHOR POINTS WITH 1/2" GRADE 5 (MINIMUM) STEEL FLAT WASHERS AND 1/2" - 13 TPI GRADE 5 (MINIMUM) HEX NUTS AS SHOWN. MUST USE DOUBLED HEX NUT CONFIGURATION ABOVE CEILING ANCHORS. SINGLE HEX NUT BENEATH HANGING ANGLE IS ACCEPTABLE FOR PSP HANGING ANGLES. MAINTAIN 1/4" OF EXPOSED THREADS BENEATH BOTTOM HEX NUT. TORQUE ALL HEX NUTS TO 57 FT-LBS.

REVISIONS

DESCRIPTION	DATE:

CAPTIVEAIRE
www.captiveaire.com
Southern California Office
3002 Dow Ave., Suite 410, Tustin, CA 92780 PHONE: (714) 957-1500 FAX: (919) 227-5975 EMAIL: reg86@captiveaire.com

Panda Express - Tampa FL (D8135)
0

DATE: 2/18/2021
DWG.#: 4748429
DRAWN BY: AH-86
SCALE: 3/4" = 1'-0"
MASTER DRAWING

SHEET NO.
1

PANDA RESTAURANT GROUP INC.
1683 Walnut Grove Ave.
Rosemead, California
91770
Telephone: 626.799.9898
Facsimile: 626.372.8288

All ideas, designs, arrangement and plans indicated or represented by this drawing are the property of Panda Express Inc. and were created for use on this specific project. None of these ideas, designs, arrangements or plans may be used by or disclosed to any person, firm, or corporation without the written permission of Panda Express Inc.

REVISIONS:

ISSUE DATE:

1	04.29.2021 ISSUE FOR PERMIT
2	06.04.2021 ISSUE FOR BID

DRAWN BY: SDT

PANDA PROJECT #: - S8-22-D8135
C&P PROJECT #: - 2200775

Cuhaci & Peterson
Architects Engineers Planners
2600 Maitland Center Pkwy. Maitland, FL 32751
P (407) 661-9100
F (407) 661-9101
www.c-p.com
Florida Corporate Certificate #AA C000526

06.04.2021

PANDA EXPRESS
TRUE WARM AND WELCOME 2300
SKYBROOKE BOULEVARD & STATE ROAD 54
LUTZ, FL 33558

M-400

HOOD DETAIL PLAN

TRUE WARM & WELCOME 2300 R4

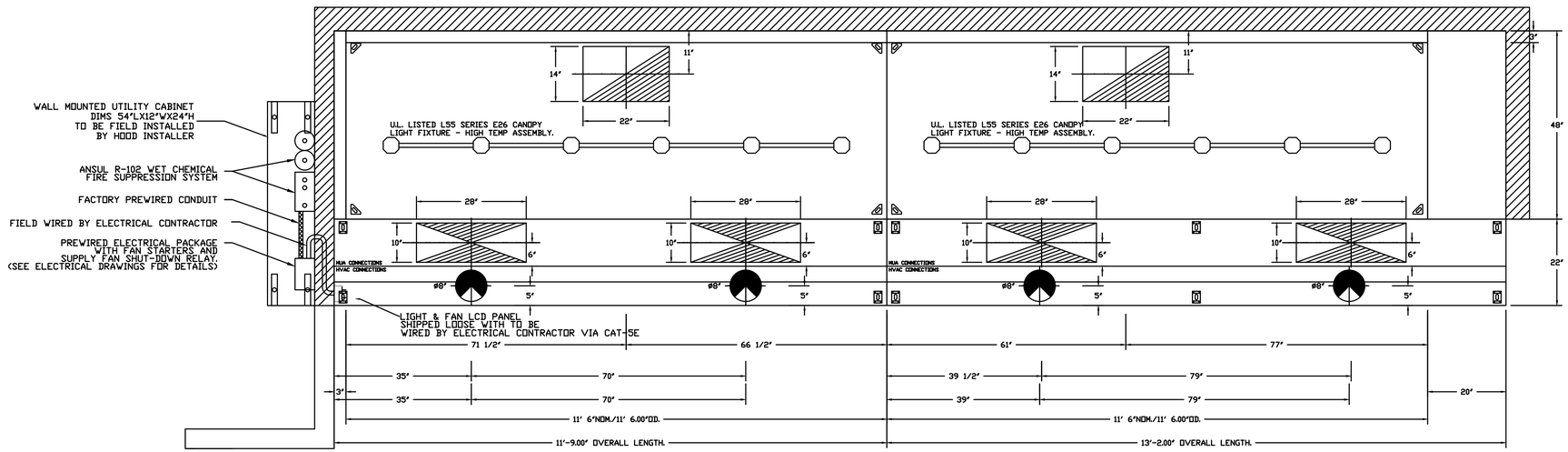

PLAN VIEW – HOOD #1
11' 6.00" LONG 4824ND-2-ACPSP-F

ACPSP SHIPS LOOSE FOR FIELD INSTALLATION

PLAN VIEW – HOOD #2
11' 6.00" LONG 4824ND-2-ACPSP-F

ACPSP SHIPS LOOSE FOR FIELD INSTALLATION

WALL-MOUNT UTILITY CABINET
ASSEMBLY INSTRUCTIONS

HANGING ANGLE MUST BE SUPPORTED WITH 1/2" - 13 TPI GRADE 5 (MINIMUM) ALL-THREAD. SANDWICH HANGING ANGLES AND CEILING ANCHOR POINTS WITH 1/2" GRADE 5 (MINIMUM) STEEL FLAT WASHERS AND 1/2" - 13 TPI GRADE 5 (MINIMUM) HEX NUTS AS SHOWN. MUST USE DOUBLED HEX NUT CONFIGURATION BENEATH UTILITY CABINET HANGING ANGLES AND ABOVE CEILING ANCHORS. MAINTAIN 1/4" OF EXPOSED THREADS BENEATH BOTTOM HEX NUT. TORQUE ALL HEX NUTS TO 57 FT-LBS.

UTILITY CABINET
HANGING ANGLE
(HARDWARE BY INSTALLER)

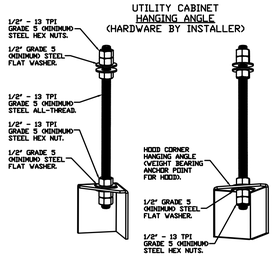

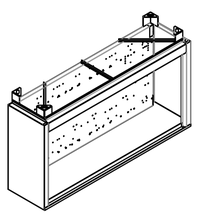

PRE-FABRICATED DOUBLE WALL ROUND DUCTWORK IS AVAILABLE AS AN ALTERNATE HVAC CONTRACTOR OR GENERAL CONTRACTOR TO CONTACT REGION 86 @ 714-957-1500 OR REG86@CAPTIVEAIRE.COM FOR DESIGN AND PRICING

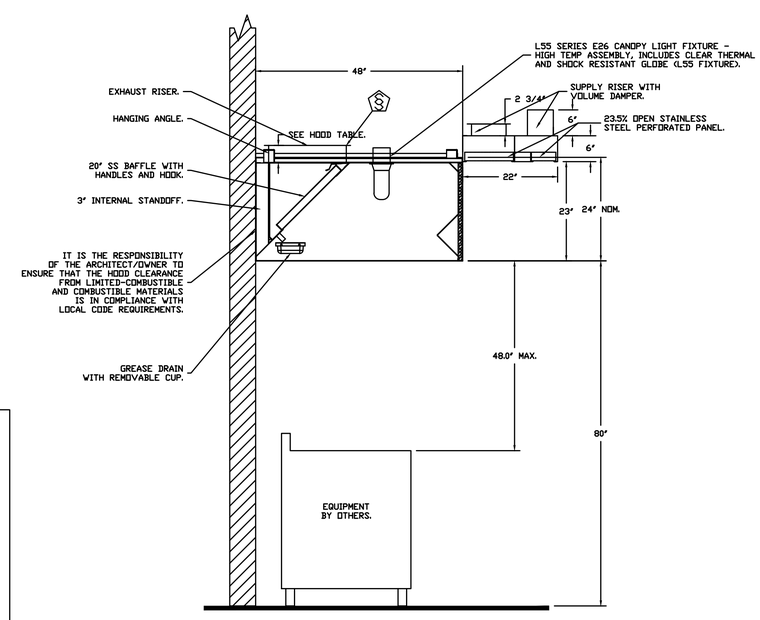

SECTION VIEW – MODEL 4824ND-2-ACPSP-F
HOOD – #1

REVISIONS

DESCRIPTION	DATE:

CAPTIVEAIRE
www.captiveaire.com
Southern California Office
3002 Dow Ave., Suite 410, Tustin, CA, 92780 PHONE: (714) 957-1500 FAX: (919) 227-5975 EMAIL: reg86@captiveaire.com

Panda Express - Tampa, FL (D8135)

DATE: 2/18/2021

DWG.#: 4748429

DRAWN BY: AH-86

SCALE: 3/4" = 1'-0"

MASTER DRAWING

SHEET NO. 2

PANDA EXPRESS CHINESE KITCHEN

PANDA RESTAURANT GROUP INC.
1683 Walnut Grove Ave.
Rosemead, California
91770
Telephone: 626.799.9898
Facsimile: 626.372.8288

All ideas, designs, arrangement and plans indicated or represented by this drawing are the property of Panda Express Inc. and were created for use on this specific project. None of these ideas, designs, arrangements or plans may be used by or disclosed to any person, firm, or corporation without the written permission of Panda Express Inc.

REVISIONS:

ISSUE DATE:

1	04.29.2021 ISSUE FOR PERMIT
2	06.04.2021 ISSUE FOR BID

DRAWN BY: SDT

PANDA PROJECT #: - S8-22-D8135
C&P PROJECT #: - 2200775

Cuhaci & Peterson
Architects Engineers Planners
2600 Maitland Center Pkwy. Maitland, FL 32751
P (407) 661-9100
F (407) 661-9101
www.cp.com
Florida Corporate Certificate #AA C000526

06.04.2021

PANDA EXPRESS
TRUE WARM AND WELCOME 2300
SKYBROOKE BOULEVARD & STATE ROAD 54
LUTZ, FL 33558

M-401

HOOD DETAIL PLAN

TRUE WARM & WELCOME 2300 R4

NOTE: UNLESS OTHERWISE STATED, PANDA RESTAURANT GROUP SHALL PROVIDE ALL EQUIPMENT ON THE FOLLOWING CAPTIVEAIRE SHEETS, INCLUDING: HOODS, FIRE SYTEM, EXHAUST FANS, SUPPLY FAN, BATHROOM FAN AND ELECTRICAL INTERLOCK PACKAGE

ANSUL GAS VALVE:

THE ANSUL GAS VALVE IS PROVIDED BY CAPTIVEAIRE SYSTEMS. CONTACT OUR OFFICE WITH THE VALVE SIZE 3 DAYS IN ADVANCE OF WHEN IT IS NEEDED ON SITE.

FOR QUESTIONS CALL THE
CAPTIVEAIRE
SOUTHERN CALIFORNIA OFFICE

3002 DOW AVENUE, SUITE 410
TUSTIN, CA 92780
TEL: 714-957-1500 EMAIL: REG86@CAPTIVEAIRE.COM

TYPICAL CONTROL PANEL WALL UTILITY CABINET MOUNT INSTALLATION WITH FIRE SUPPRESSION SYSTEM

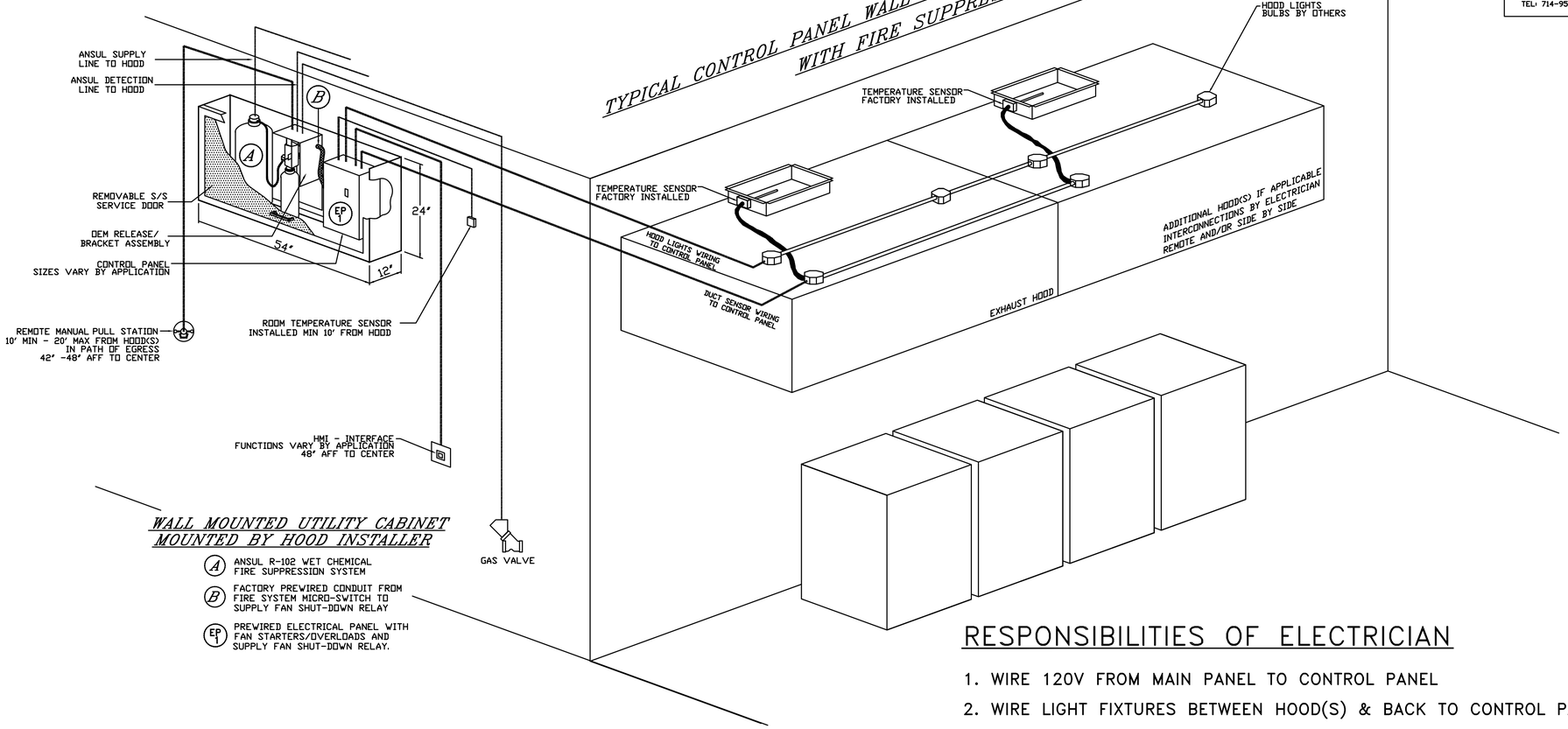

WALL MOUNTED UTILITY CABINET MOUNTED BY HOOD INSTALLER

- (A) ANSUL R-102 WET CHEMICAL FIRE SUPPRESSION SYSTEM
- (B) FACTORY PREWIRED CONDUIT FROM FIRE SYSTEM MICRO-SWITCH TO SUPPLY FAN SHUT-DOWN RELAY
- (EP 1) PREWIRED ELECTRICAL PANEL WITH FAN STARTERS/OVERLOADS AND SUPPLY FAN SHUT-DOWN RELAY.

RESPONSIBILITIES OF ELECTRICIAN

1. WIRE 120V FROM MAIN PANEL TO CONTROL PANEL
2. WIRE LIGHT FIXTURES BETWEEN HOOD(S) & BACK TO CONTROL PANEL
3. WIRE TEMPERATURE SENSOR(S) FROM EXHAUST COLLARS TO CONTROL PANEL
4. MOUNT & WIRE ROOM SENSOR TO CONTROL PANEL
5. WIRE FAN POWER FROM MAIN PANEL THROUGH CONTROL PANEL TO FAN(S)
6. WIRE SHUNT COIL TO CONTROL PANEL
7. WIRE GAS VALVE (IF APPLICABLE) TO CONTROL PANEL (120V FROM CONTROL PANEL)

ADDITIONAL RESPONSIBILITIES IF APPLICABLE

1. IF MULTIPLE FIRE SYSTEMS ON SINGLE CONTROL PANEL, THE FOLLOWING MUST OCCUR
   - A. ANSUL AUTOMAN MICROSWITCHES TO BE WIRED IN SERIES BACK TO CONTROL PANEL
   - B. ANSUL CATRIDGE MICROSWITCHES TO BE WIRED IN SERIES BACK TO CONTROL PANEL

RESPONSIBILITIES OF ALARM CONTRACTOR

1. WIRE ANSUL ALARM MICROSWITCH TO BUILDING ALARM PANEL

TERMINAL BLOCK WIRING DETAILS CAN BE FOUND ON ELECTRICAL WIRING DIAGRAMS

REVISIONS

	DESCRIPTION	DATE:
△		
△		
△		
△		

CAPTIVEAIRE
www.captiveaire.com
Southern California Office
3002 Dow Ave., Suite 410, Tustin, CA, 92780 PHONE: (714) 957-1500 FAX: (919) 227-5975 EMAIL: reg86@captiveaire.com

Panda Express - Tampa FL (D8135)
0

DATE: 2/18/2021
DWG.#: 4748429
DRAWN BY: AH-86
SCALE: 3/4" = 1'-0"
MASTER DRAWING

SHEET NO. 3

PANDA EXPRESS CHINESE KITCHEN

PANDA RESTAURANT GROUP INC.
1683 Walnut Grove Ave.
Rosemead, California
91770
Telephone: 626.799.9898
Facsimile: 626.372.8288

All ideas, designs, arrangement and plans indicated or represented by this drawing are the property of Panda Express Inc. and were created for use on this specific project. None of these ideas, designs, arrangements or plans may be used by or disclosed to any person, firm, or corporation without the written permission of Panda Express Inc.

REVISIONS:

ISSUE DATE:

1	04.29.2021 ISSUE FOR PERMIT
2	06.04.2021 ISSUE FOR BID

DRAWN BY: SDT

PANDA PROJECT #: - S8-22-D8135
C&P PROJECT #: - 2200775

Cuhaci & Peterson
Architects Engineers Planners
2600 Maitland Center Pkwy. Maitland, FL 32751
P (407) 661-9100
F (407) 661-9101
www.c-p.com
Florida Corporate Certificate #AA C000526

06.04.2021

PANDA EXPRESS
TRUE WARM AND WELCOME 2300
SKYBROOKE BOULEVARD & STATE ROAD 54
LUTZ, FL 33558

M-402

HOOD DETAIL PLAN

TRUE WARM & WELCOME 2300 R4

EXHAUST FAN INFORMATION – JOB#4748429

FAN UNIT NO	TAG	QTY	FAN UNIT MODEL #	MANUFACTURER	CFM	ESP	RPM	MOTOR ENCL	HP	BHP	PHASE	VOLT	FLA	DISCHARGE VELOCITY	WEIGHT (LBS)	SONES
1		1	EABDU18	ECON-AIR	3450	1.250	1230	ODP	2.000	1.3820	3	208	5.9	797 FPM	184	17.9
2		1	EABDU18	ECON-AIR	3450	1.250	1230	ODP	2.000	1.3820	3	208	5.9	797 FPM	184	17.9
3		1	EABDCR7	ECON-AIR	450	0.250	1134	ODP	0.250	0.0850	1	115	4.8		90	6.3

CONDENSER DETAILS

FAN UNIT NO	TAG	FAN UNIT MODEL #	CONDENSER NO	TONNAGE	VOLTAGE	PHASE	FREQUENCY	MCA	RLA	MAX FUSE SIZE	MIN WIRE SIZE	SEER
4		EA-A3-G18-MPU	1	5	208-230	3 PHASE	60 HZ	21.4 AMPS	17.4 AMPS	30 AMPS	10 AWG	14
			2	5	208-230	3 PHASE	60 HZ	21.4 AMPS	17.4 AMPS	30 AMPS	10 AWG	14

MUA FAN INFORMATION – JOB#4748429

FAN UNIT NO	TAG	QTY	FAN UNIT MODEL #	BLOWER	HOUSING	MIN CFM	DESIGN CFM	ESP	RPM	MOTOR ENCL	HP	BHP	PHASE	VOLT	FLA	MCA	MOCP	WEIGHT (LBS)	SONES
4		1	EA-A3-G18-MPU	G18-PB	A3	3600	5520	0.750	618	ODP,PREMIUM	3.000	1.8160	3	208	8.7	10.9A	15A	1618	17.2

COILS – JOB#4748429

FAN UNIT NO	TAG	COIL TYPE	DESIGN CFM	COOLING											HEATING								
				ENTERING DB TEMP	ENTERING WB TEMP	LEAVING DB TEMP	LEAVING WB TEMP	ENTERING FLUID TEMP	LEAVING FLUID TEMP	FLUID FLOW RATE	PERCENT GLYCOL	TOTAL CAPACITY	SENSIBLE CAPACITY	LATENT CAPACITY	ENTERING DB TEMP	LEAVING DB TEMP	ENTERING FLUID TEMP	LEAVING FLUID TEMP	FLUID FLOW RATE	PERCENT GLYCOL	STEAM PRESSURE	TOTAL CAPACITY	SENSIBLE CAPACITY
4		DX	5520	78.0°F	78.0°F	72.8°F	72.8°F	---	---	---	---	119.6 MBH	30.8 MBH	88.8 MBH	---	---	---	---	---	---	---	---	---

FAN OPTIONS

FAN UNIT NO	TAG	QTY	DESCRIPTION
1		1	GREASE BOX.
		1	UPBLAST FAN WHEEL ACCESS PORT.
		1	2 YEAR PARTS WARRANTY.
2		1	GREASE BOX.
		1	UPBLAST FAN WHEEL ACCESS PORT.
		1	2 YEAR PARTS WARRANTY.
3		1	I 15-BDD DAMPER.
		1	2 YEAR PARTS WARRANTY.
4		1	10 TON 2 CIRCUIT (5/5) MODULAR PACKAGED COOLING OPTION FOR SIZE 3 MUA (3,600 TO 6,000 CFM), 208V/230V, 3 PHASE. COOLING THERMOSTAT OR PROGRAMMABLE STAT REQUIRED FOR PROPER OPERATION.
		1	MOD PACKAGE UNIT AC CONTROLS FOR UNTEMPERED FANS.
		1	INSULATED BLOWER SECTION SIZE 3 COMMERCIAL MODULAR.
		1	SHIP CONDENSERS LOOSE. TWO CONDENSERS, THREE PHASE. CONDENSER DISCONNECTS SHIPPED LOOSE.
		1	CONDENSER SUPPORT FOR SIZE 3 MOD PACKAGE UNIT.
		1	SEPARATE 120V WIRING PACKAGE (REQUIRED AND USED ONLY FOR DCV OR PREWIRE WITH VFD) - THREE PHASE ONLY.
		1	2 YEAR PARTS WARRANTY.

FAN ACCESSORIES

FAN UNIT NO	TAG	EXHAUST			SUPPLY			
		GREASE CUP	GRAVITY DAMPER	WALL MOUNT	SIDE DISCHARGE	GRAVITY DAMPER	MOTORIZED DAMPER	WALL MOUNT
1		YES						
2		YES						
3			YES					

CURB ASSEMBLIES

NO	ON FAN	WEIGHT	ITEM	SIZE
1	# 1	38 LBS	CURB	26.500"W X 26.500"L X 24.000"H VENTED HINGED.
2	# 2	38 LBS	CURB	26.500"W X 26.500"L X 24.000"H VENTED HINGED.
3	# 3	18 LBS	CURB	19.500"W X 19.500"L X 12.000"H .
4	# 4	108 LBS	RAIL	6.000"W X 35.000"L X 20.000"H.
	# 4		RAIL	6.000"W X 35.000"L X 20.000"H.
4	# 4	108 LBS	CURB	35.000"W X 35.000"L X 20.000"H .

FANS #1, #2 - EABDU18 EXHAUST FAN

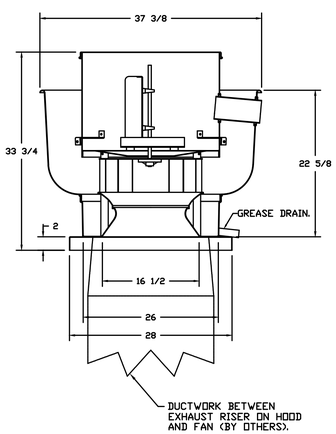

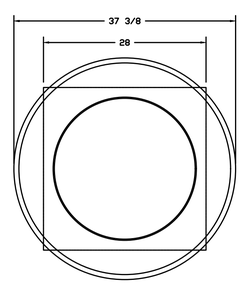

TOP VIEW

FEATURES:

- ROOF MOUNTED FANS.
- RESTAURANT MODEL.
- UL705 AND UL762 AND ULC-S645.
- AMCA SOUND AND AIR CERTIFIED.
- WIRING FROM MOTOR TO DISCONNECT SWITCH.
- NEMA 3R SAFETY DISCONNECT SWITCH.
- HIGH HEAT OPERATION 300°F (149°C).
- GREASE CLASSIFICATION TESTING.

NORMAL TEMPERATURE TEST
EXHAUST FAN MUST OPERATE CONTINUOUSLY WHILE EXHAUSTING AIR AT 300°F (149°C) UNTIL ALL FAN PARTS HAVE REACHED THERMAL EQUILIBRIUM, AND WITHOUT ANY DETERIORATING EFFECTS TO THE FAN WHICH WOULD CAUSE UNSAFE OPERATION.

ABNORMAL FLARE-UP TEST
EXHAUST FAN MUST OPERATE CONTINUOUSLY WHILE EXHAUSTING BURNING GREASE VAPORS AT 600°F (316°C) FOR A PERIOD OF 15 MINUTES WITHOUT THE FAN BECOMING DAMAGED TO ANY EXTENT THAT COULD CAUSE AN UNSAFE CONDITION.

OPTIONS

GREASE BOX.
UPBLAST FAN WHEEL ACCESS PORT.
2 YEAR PARTS WARRANTY.

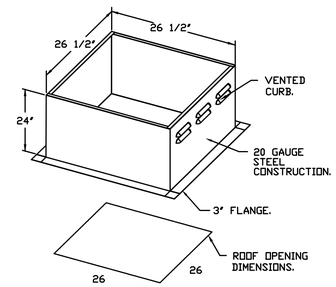

PITCHED CURBS ARE AVAILABLE FOR PITCHED ROOFS.

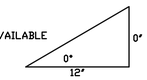

SPECIFY PITCH:
EXAMPLE: 7/12 PITCH = 30° SLOPE.

REVISIONS

DESCRIPTION	DATE:

CAPTIVEAIRE
www.captiveaire.com
Southern California Office
3002 Dow Ave., Suite 410, Tustin, CA 92780 PHONE: (714) 957-1500 FAX: (919) 227-5975 EMAIL: reg86@captiveaire.com

Panda Express - Tampa FL (D8135)
, 0

DATE: 2/18/2021
DWG.#: 4748429
DRAWN BY: AH-86
SCALE: 3/4" = 1'-0"
MASTER DRAWING
SHEET NO. 4

PANDA EXPRESS CHINESE KITCHEN

PANDA RESTAURANT GROUP INC.
1683 Walnut Grove Ave.
Rosemead, California
91770
Telephone: 626.799.9898
Facsimile: 626.372.8288

All ideas, designs, arrangement and plans indicated or represented by this drawing are the property of Panda Express Inc. and were created for use on this specific project. None of these ideas, designs, arrangements or plans may be used by or disclosed to any person, firm, or corporation without the written permission of Panda Express Inc.

REVISIONS:

ISSUE DATE:

1	04.29.2021 ISSUE FOR PERMIT
2	06.04.2021 ISSUE FOR BID

DRAWN BY: SDT

PANDA PROJECT #: - S8-22-D8135
C&P PROJECT #: - 2200775

Cohaci & Peterson
Architects Engineers Planners
2600 Maitland Center Pkwy. Maitland, FL 32751
P (407) 661-9100
F (407) 661-9101
www.c-p.com
Florida Corporate Certificate #AA C000526

06.04.2021

PANDA EXPRESS
TRUE WARM AND WELCOME 2300
SKYBROOKE BOULEVARD & STATE ROAD 54
LUTZ, FL 33558

M-403

HOOD DETAIL PLAN

TRUE WARM & WELCOME 2300 R4

FAN #3 EABDCR7 - EXHAUST FAN

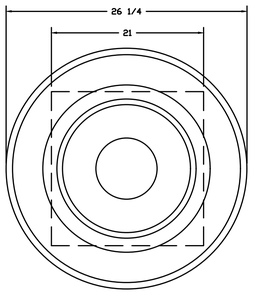

TOP VIEW

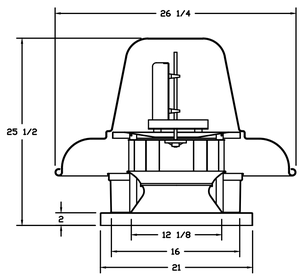

FEATURES:

- ROOF MOUNTED FANS.
- UL705.
- AMCA SOUND AND AIR CERTIFIED.
- WIRING FROM MOTOR TO DISCONNECT SWITCH.
- DISCONNECT SWITCH.
- STANDARD BIRD SCREEN.

OPTIONS

1 15-BDD DAMPER.
2 YEAR PARTS WARRANTY.

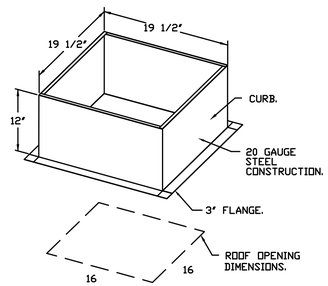

PITCHED CURBS ARE AVAILABLE FOR PITCHED ROOFS.

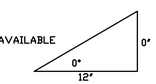

SPECIFY PITCH:
EXAMPLE: 7/12 PITCH = 30° SLOPE.

BACKDRAFT DAMPER INSTALLATION

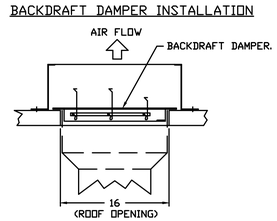

REVISIONS

DESCRIPTION	DATE:

CAPTIVEAIRE
www.captiveaire.com
Southern California Office
3002 Dow Ave., Suite 410, Tustin, CA 92780 PHONE: (714) 957-1500 FAX: (919) 227-5975 EMAIL: reg86@captiveaire.com

Panda Express - Tampa FL (D8135)
, 0

DATE: 2/18/2021
DWG.#: 4748429
DRAWN BY: AH-86
SCALE: 3/4" = 1'-0"
MASTER DRAWING

SHEET NO.
5

PANDA EXPRESS CHINESE KITCHEN

PANDA RESTAURANT GROUP INC.
1683 Walnut Grove Ave.
Rosemead, California
91770
Telephone: 626.799.9898
Facsimile: 626.372.8288

All ideas, designs, arrangement and plans indicated or represented by this drawing are the property of Panda Express Inc. and were created for use on this specific project. None of these ideas, designs, arrangements or plans may be used by or disclosed to any person, firm, or corporation without the written permission of Panda Express Inc.

REVISIONS:

ISSUE DATE:

1	04.29.2021 ISSUE FOR PERMIT
2	06.04.2021 ISSUE FOR BID

DRAWN BY: SDT

PANDA PROJECT #: - S8-22-D8135
C&P PROJECT #: - 2200775

Cohaci & Peterson
Architects Engineers Planners
2600 Maitland Center Pkwy. Maitland, FL 32751
P (407) 661-9100
F (407) 661-9101
www.cp.com
Florida Corporate Certificate #AA C000526

06.04.2021

PANDA EXPRESS

TRUE WARM AND WELCOME 2300
SKYBROOKE BOULEVARD & STATE ROAD 54
LUTZ, FL 33558

M-404

HOOD DETAIL PLAN

TRUE WARM & WELCOME 2300 R4

FAN #4 EA-A3-G18-MPU - SUPPLY FAN
1. SUPPLY UNIT WITH 18" BLOWER IN SIZE #3 HOUSING.
2. INTAKE HOOD WITH EZ FILTERS.
3. DOWN DISCHARGE - AIR FLOW RIGHT -> LEFT.
4. 10 TON, DUAL CIRCUIT (5/5) MODULAR PACKAGED COOLING OPTION FOR SIZE 3 MODULAR PACKAGED UNIT. INCLUDES CONDENSER, DX COIL, FILTER/DRYER KIT, THERMAL EXPANSION VALVE, R410A REFRIGERANT, AND REFRIGERANT PIPING. (3,600 TO 6,000 CFM) WHEN ORDERED WITH OPPOSITE AIRFLOW CONDENSERS ACCESS AND COIL PIPING WILL REMAIN IN STANDARD POSITION. DRAIN AND SLEDS WILL MOVE TO THE OPPOSITE SIDE. ANY OTHER CHANGE WILL REQUIRE CLI. CONDENSERS REQUIRE SEPARATE 208V, 3 PHASE POWER SUPPLY UNLESS ORDERED WITH SINGLE POINT CONNECTION. COIL = 3E2060GM.
5. CONTROL PACKAGE FOR MOD PACKAGE UNIT COOLING ONLY UNIT. INCLUDES AIRFLOW PROVING SWITCH, RTULINK-ACHP BOARD AND TERMINAL BLOCKS.
6. INSULATED BLOWER HOUSING SIZE 3 COMMERCIAL MODULAR.
7. SHIP CONDENSERS LOOSE. THE REFRIGERATION LINES WILL NEED TO BE STUBBED OUT 12 INCHES. THE SUCTION LINES NEEDS TO BE INSULATED INSIDE THE COIL MODULE. ROTARY DISCONNECT SHOULD NOT BE INSTALLED ON THE POST, BLANK POST SHOULD BE USED IN PLACE.
8. SUPPORT SHELL FOR SIZE 3 MODULAR PACKAGE UNIT. INCLUDES CONTROL VESTIBULE. INCLUDES CONDENSER SUPPORTS. DOES NOT INCLUDE RETURN AIR OR INLET AIR DAMPER.
9. SEPARATE 120VAC WIRING PACKAGE FOR MAKE-UP AIR UNITS. OPTION MUST BE SELECTED WHEN MOUNTING VFD IN PREWIRE PANEL OR WITH DCV PACKAGE. PROVIDES SEPARATE 120VAC INPUT TO SUPPLY FAN. THIS 120V SIGNAL MUST BE RUN BY ELECTRICIAN FROM DCV TO MUA SWITCH.
11. 2 YEAR PARTS WARRANTY.

*NOTE: SUPPLY DUCT MUST BE INSTALLED TO MEET SMACNA STANDARDS. A MINIMUM STRAIGHT DUCT LENGTH MUST BE MAINTAINED DOWNSTREAM OF UNIT DISCHARGE AS OUTLINED IN AMCA PUBLICATION 201. WHEN USING RECTANGULAR DUCTWORK, ELBOWS MUST BE RADIUS THROAT, RADIUS BACK WITH TURNING VANES. FLEXIBLE DUCTWORK AND SQUARE THROAT/SQUARE BACK ELBOWS SHOULD NOT BE USED. ANY TRANSITION AND/OR TURNS IN THE DUCTWORK WILL CAUSE SYSTEM EFFECT. SYSTEM EFFECT WILL DRASTICALLY INCREASE STATIC PRESSURE AND REDUCE AIRFLOW. DO NOT RELY ON UNIT TO SUPPORT DUCT IN ANY WAY. FAILURE TO PROPERLY SIZE DUCTWORK MAY CAUSE SYSTEM EFFECTS AND REDUCE PERFORMANCE OF THE EQUIPMENT. SUGGESTED STRAIGHT DUCT SIZE IS 24" x 24".

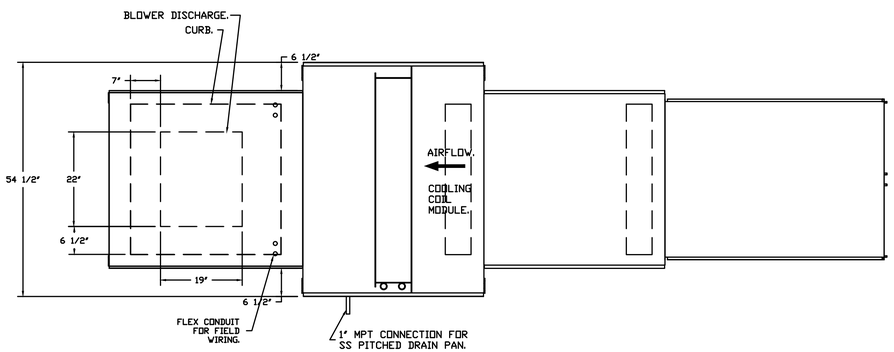

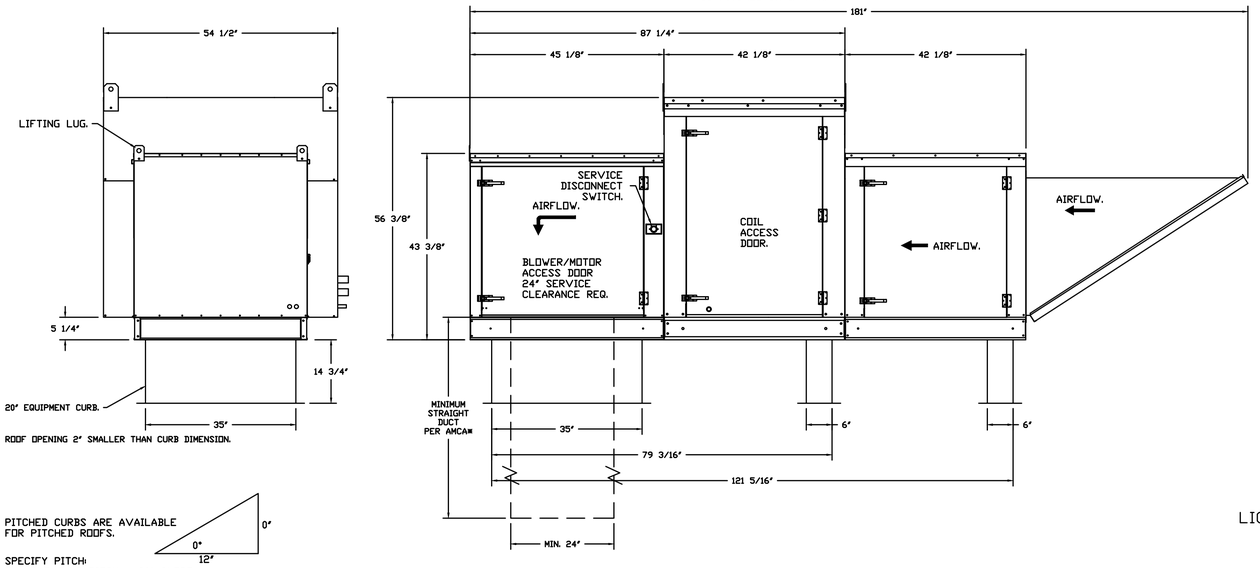

PITCHED CURBS ARE AVAILABLE FOR PITCHED ROOFS.

SPECIFY PITCH:
EXAMPLE: 7/12 PITCH = 30° SLOPE.

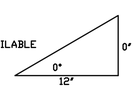

TYPICAL DRAIN TRAP INSTALL

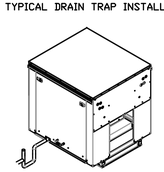

RECOMMENDED COOLING COIL DRAIN TRAP CONFIGURATION.

Refer to Plumbing Detail P-500 for AC Unit Condensate Drain

NOTES: Important: Copper above roof deck where it is exposed. PVC below roof deck
1) 1" DIAMETER PVC PIPE ONLY.
2) USE ONLY LOW PROFILE COUPLINGS.
3) ADD CLEAN OUT AS SHOWN.

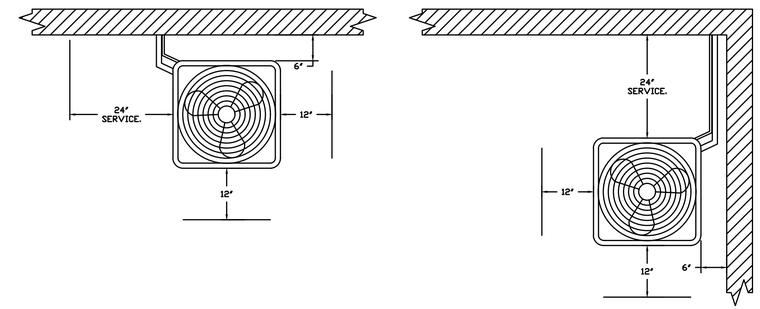

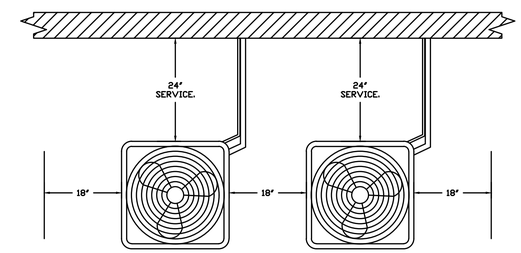

CONDENSER CLEARANCES

48" CLEARANCE REQUIRED ABOVE CONDENSERS.
(NOTE: **CONDENSERS SHOWN HERE ARE NOT DRAWN AT SCALE).

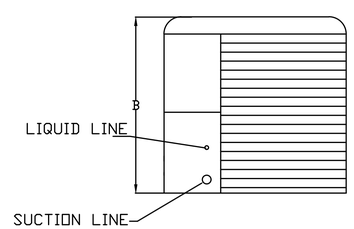

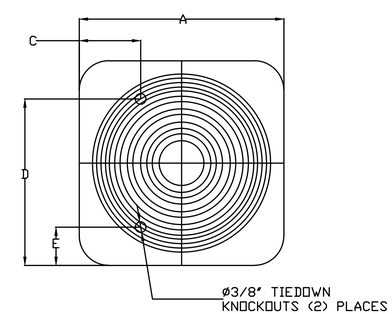

ALL DIMENSIONS ARE NOMINAL AND GIVEN IN INCHES.

		UNIT DIMENSIONS					CONNECTION SIZES		NOMINAL TONNAGE
MODEL	WEIGHT	A	B	C	D	E	SUCTION	LIQUID	
24ABB360	190 LBS	31-3/16	25-1/2	9-1/8	24-11/16	6-9/16	7/8	3/8	5

ELECTICAL INFORMATION

MODEL	V-PH	RLA	MCA	FUSE SIZE
24ABB360	208/230-3	16.0	21.4	30

REVISIONS

DESCRIPTION	DATE:

CAPTIVEAIRE
www.captiveaire.com
Southern California Office
3002 Dow Ave., Suite 410, Tustin, CA, 92780 PHONE: (714) 957-1500 FAX: (919) 227-5975 EMAIL: reg86@captiveaire.com

Panda Express - Tampa FL (D8135)
, 0

DATE: 2/18/2021
DWG.#: 4748429
DRAWN BY: AH-86
SCALE: 3/4" = 1'-0"
MASTER DRAWING
SHEET NO. 6

PANDA EXPRESS CHINESE KITCHEN

PANDA RESTAURANT GROUP INC.
1683 Walnut Grove Ave.
Rosemead, California
91770
Telephone: 626.799.9898
Facsimile: 626.372.8288

All ideas, designs, arrangement and plans indicated or represented by this drawing are the property of Panda Express Inc. and were created for use on this specific project. None of these ideas, designs, arrangements or plans may be used by or disclosed to any person, firm, or corporation without the written permission of Panda Express Inc.

REVISIONS:

ISSUE DATE:

1	04.29.2021 ISSUE FOR PERMIT
2	06.04.2021 ISSUE FOR BID

DRAWN BY: SDT

PANDA PROJECT #: - S8-22-D8135
C&P PROJECT #: - 2200775

Cuhaci & Peterson
Architects Engineers Planners
2600 Maitland Center Pkwy. Maitland, FL 32751
P (407) 661-9100
F (407) 661-9101
www.c-p.com
Florida Corporate Certificate AAA C000526

06.04.2021

PANDA EXPRESS
TRUE WARM AND WELCOME 2300
SKYBROOKE BOULEVARD & STATE ROAD 54
LUTZ, FL 33558

M-405

HOOD DETAIL PLAN

TRUE WARM & WELCOME 2300 R4

ELECTRICAL PACKAGE – JOB#4748429

NO	TAG	PACKAGE #	LOCATION	SWITCHES LOCATION	SWITCHES QUANTITY	OPTION	FANS CONTROLLED TYPE	Φ	HP	VOLT	FLA
1		SC-321110MA-SEP	WALL UTILITY CABINET LEFT	08 – SHIP LOOSE W/ PREWIRE	1 LIGHT 1 FAN	SMART CONTROLS THERMOSTATIC CONTROL W/ RELAY ON/OFF WITH SUPPLY	EXHAUST	3	2.000	208	5.9
							EXHAUST	3	2.000	208	5.9
							SUPPLY	3	3.000	208	8.7

JOB NO	MODEL NUMBER	DRAWN BY	SCHEMATIC TYPE
4748429	SC-321110MA-SEP		INSTALL
	JOB NAME: Panda Express – Tampa FL (D81...	DATE: 2/18/2021	DWG NO: ECP #1-1

DESCRIPTION OF OPERATION:
3 Phase w/ control for 2 Exhaust Fans, 1 Supply Fan, Exhaust on in Fire, Lights out in Fire, Fan(s) On/Off Thermostatically Controlled. Separate Breaker Input for each Fan. Room temperature sensor shipped loose for field installation. INVERTER DUTY 3 PHASE MOTOR REQUIRED FOR USE WITH VFD.

BREAKER PANEL TO PRIMARY CONTROL PANEL

Responsibility: Electrician

BREAKER SIZE SHOWN IS THE MAXIMUM ALLOWED

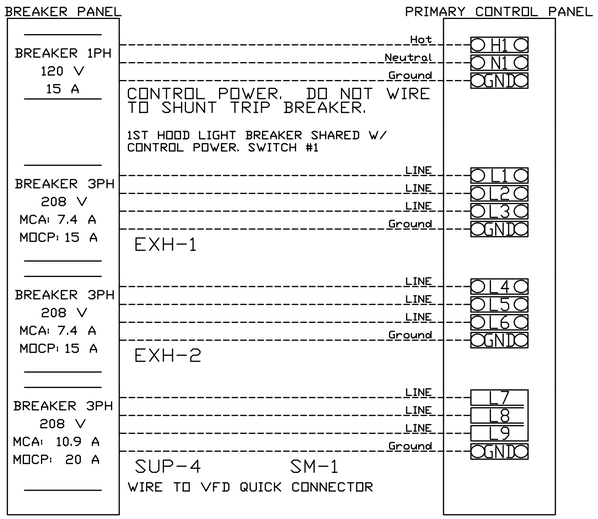

BREAKER PANEL TO FANS

Responsibility: Electrician

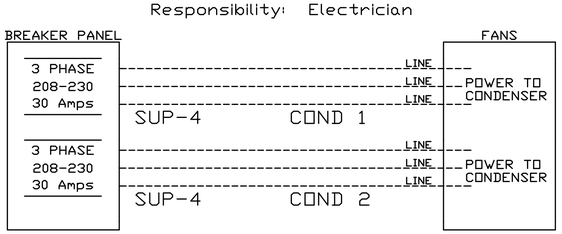

CONTROL PANEL TO FANS

Responsibility: Electrician

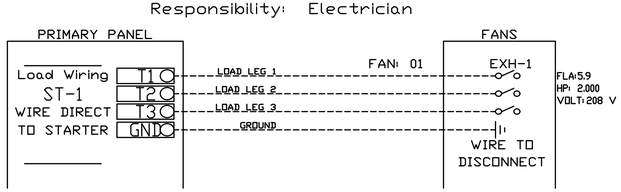

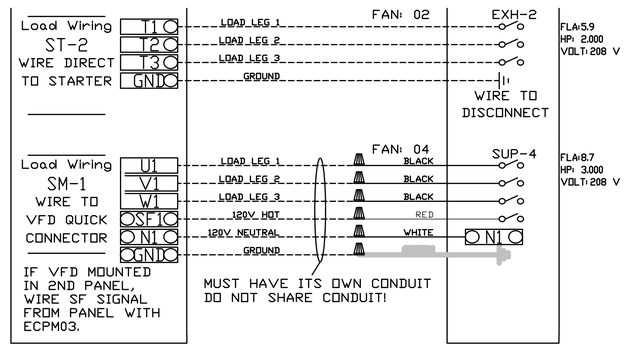

CONTROL PANEL TO ACCESSORY ITEMS

Responsibility: Electrician

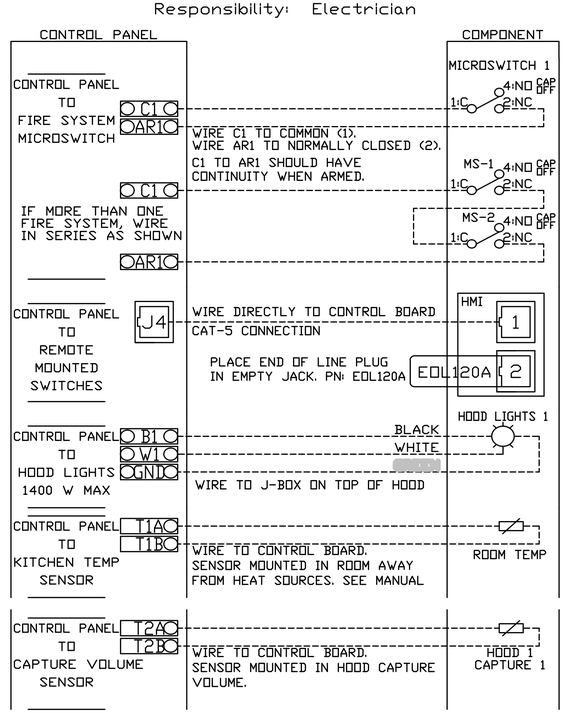

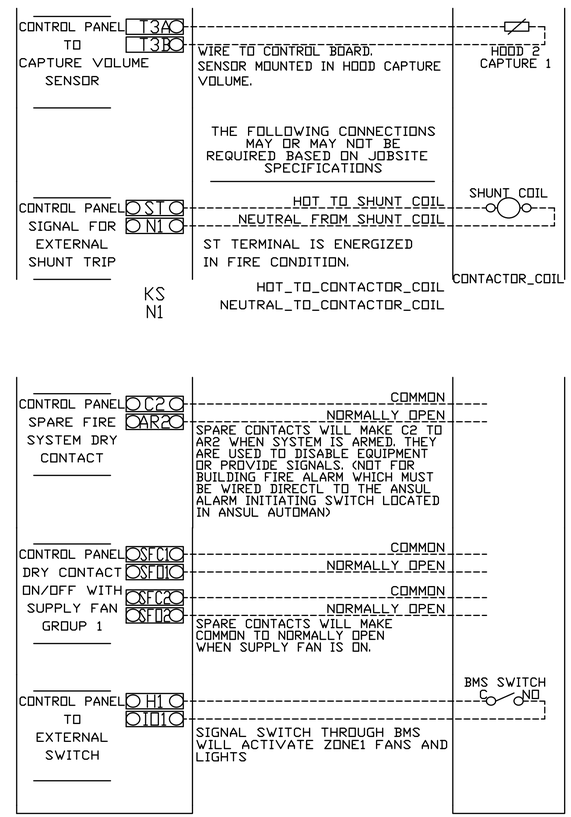

REVISIONS

	DESCRIPTION	DATE:
△		
△		
△		
△		

CAPTIVEAIRE
www.captiveaire.com
Southern California Office
3002 Dow Ave., Suite 410, Tustin, CA, 92780 PHONE: (714) 957-1500 FAX: (919) 227-5975 EMAIL: reg86@captiveaire.com

Panda Express – Tampa FL (D8135)

DATE: 2/18/2021
DWG.#: 4748429
DRAWN BY: AH-86
SCALE: 3/4" = 1'-0"
MASTER DRAWING
SHEET NO. 7

PANDA EXPRESS CHINESE KITCHEN

PANDA RESTAURANT GROUP INC.
1683 Walnut Grove Ave.
Rosemead, California
91770
Telephone: 626.799.9898
Facsimile: 626.372.8288

All ideas, designs, arrangement and plans indicated or represented by this drawing are the property of Panda Express Inc. and were created for use on this specific project. None of these ideas, designs, arrangements or plans may be used by or disclosed to any person, firm, or corporation without the written permission of Panda Express Inc.

REVISIONS:

ISSUE DATE:

1	04.29.2021 ISSUE FOR PERMIT
2	06.04.2021 ISSUE FOR BID

DRAWN BY: SDT

PANDA PROJECT #: - S8-22-D8135
C&P PROJECT #: - 2200775

Cuhaci & Peterson
Architects Engineers Planners
2600 Maitland Center Pkwy. Maitland, FL 32751
P (407) 661-9100
F (407) 661-9101
www.c-p.com
Florida Corporate Certificate #AA C000526

06.04.2021

PANDA EXPRESS
TRUE WARM AND WELCOME 2300
SKYBROOKE BOULEVARD & STATE ROAD 54
LUTZ, FL 33558

M-406

HOOD DETAIL PLAN

TRUE WARM & WELCOME 2300 R4

DUCTWORK #1 PARTS – JOB#4748429 DOUBLE WALL

TAG	PART #	CFM	SP	WEIGHT	VELOCITY	QTY	DESCRIPTION
P1	DW1829DWLT-2R-S			50.46		1	DOUBLE WALL DUCT - 18" INNER DUCT, 29" LONG - 2 LAYERS REDUCED CLEARANCE - 22" STAINLESS STEEL OUTER SHELL.
P2	DW1847DWAJD-2R-S			107.98		1	DOUBLE WALL ADJUSTABLE DUCT - 18" INNER DUCT - 2 LAYERS REDUCED CLEARANCE - 22" STAINLESS STEEL OUTER SHELL. MIN LENGTH = 11" / MAX LENGTH = 48.5" / ADJUSTMENT = 30.5" / ADJUSTABLE SECTION MAY NEED TO BE CUT. INCLUDES SINGLE AND DOUBLE WALL "V" CLAMPS.
P3	DW1890DWASY-2R-S			45.59		1	DOUBLE WALL DUCT - 18" INNER 90 DUCT - 2 LAYERS REDUCED CLEARANCE - 22" STAINLESS STEEL OUTER SHELL.
P4	DW1801DWOFFSETASY-2R-S			14.66		1	DOUBLE WALL DUCT - 18" INNER DUCT RISER & 1 DEGREE OFFSET - 2 LAYERS REDUCED CLEARANCE - 22" STAINLESS STEEL OUTER SHELL.
P5	DW1827DWAJD-2R-S			62.85		1	DOUBLE WALL ADJUSTABLE DUCT - 18" INNER DUCT - 2 LAYERS REDUCED CLEARANCE - 22" STAINLESS STEEL OUTER SHELL. MIN LENGTH = 11" / MAX LENGTH = 24.5" / ADJUSTMENT = 13.5" / ADJUSTABLE SECTION MAY NEED TO BE CUT. INCLUDES SINGLE AND DOUBLE WALL "V" CLAMPS.
P6	DW1801DWOFFSETASY-2R-S			14.66		1	DOUBLE WALL DUCT - 18" INNER DUCT RISER & 1 DEGREE OFFSET - 2 LAYERS REDUCED CLEARANCE - 22" STAINLESS STEEL OUTER SHELL.
P7 ASSEMBLED W/P8	DW18DWTEASY-2R-S			55.68		1	DOUBLE WALL DUCT - 18" INNER TEE DUCT - 2 LAYERS REDUCED CLEARANCE - 22" STAINLESS STEEL OUTER SHELL.
P8 ASSEMBLED W/P7 O=S	DW18DWACCDOORCOV-2R-S			26.16		1	DOUBLE WALL DUCT - 18" INNER ACCESS DOOR & 22" ACCESS DOOR COVER WITH CLAMPS - 2 LAYERS REDUCED CLEARANCE - 22" STAINLESS STEEL OUTER SHELL.
P9 ASSEMBLED W/P10	DW1835DWLTTP-2R-S			58.74		1	DOUBLE WALL DUCT - 18" INNER DUCT, 35" LONG - 2 LAYERS REDUCED CLEARANCE - 22" STAINLESS STEEL OUTER SHELL - USED WITH TRANSITION PLATES
P10 ASSEMBLED W/P9	DW2618TPDBEX			9.00		1	DUCT TO CURB TRANSITION 3/4" DOWN TURN, 26 1/2" CURB TO 18" DUCT, 16 GA ALUMINIZED. USED ON NCA16FA / NCA16HPFA & NCA18FA / NCA18HPFA. TRANSITION PLATE OD IS 27.00" DESIGNED FOR USE WITH EXHAUST FAN. NON-STANDARD PART.
	3M-2000PLUS			0.80		3	DUCT - 3M FIRE BARRIER 2000 PLUS SILICONE - USED AS SEALANT TO SEAL DUCT JOINTS.
	DW18DWCLASY-2R-S			8.70		4	DUCT - 18" DUCT - 22" DOUBLE "V" CLAMP - 2R INSULATION & SINGLE "V" CLAMP INCLUDED - REDUCED CLEARANCE.
TOTAL WEIGHT				482.98			

DOUBLE WALL FACTORY BUILT DUCTWORK

- ALL DUCTWORK IS REQUIRED TO BE INSTALLED WITH THE MAXIMUM SUPPORT SPACING LISTED BELOW.
- FOR A COMPLETE LIST OF APPROVED SUPPORT METHODS, SEE THE ENTIRE INSTALLATION AND OPERATION MANUAL
- DUCTWORK SHALL SLOPE NOT LESS THAN 1/16" PER LINEAR FOOT TOWARDS THE HOOD OR AN APPROVED GREASE COLLECTION RESERVOIR.
- WHERE HORIZONTAL DUCTS EXCEED 75 FEET IN LENGTH, THE SLOPE SHALL NOT BE LESS THAN 3/16" PER LINEAR FOOT.

HORIZONTAL	
DUCT DIAMETER	SUPPORT SPACING (FT)
5"	7'
6"	7'
7"	7'
8"	7'
10"	7'
12"	7'
14"	7'
16"	7'
18"	5'
20"	5'
22"	5'
24"	5'
26"	5'
28"	5'
30"	5'
32"	5'
34"	5'
36"	5'

VERTICAL			
TYPE	WALL SUPPORT (FT)	CURB SUPPORT (FT)	FLOOR SUPPORT (FT)
2R & 2R HT (5'-16')	20'	24'	24'
2R (18")	18'	24'	24'
3R & 3Z (5'-24')	10'	24'	24'
3Z (26' -36')	10'	20'	20'

DO NOT LEAK TEST USING SMOKE BOMBS CONTAINING CHLORINES/CHLORIDES. CONSULT WITH CAPTIVEAIRE FOR PROPER LEAK TESTING METHODS.

PRE-FABRICATED DOUBLE WALL ROUND DUCT IS AVAILABLE AS AN ALTERNATE HVAC CONTRACTOR OR GENERAL CONTRACTOR TO CONTACT REGION 86 @ 714-957-1500 OR REG86@CAPTIVEAIRE.COM FOR DESIGN AND PRICING

DUCTWORK #1 FRONT VIEW

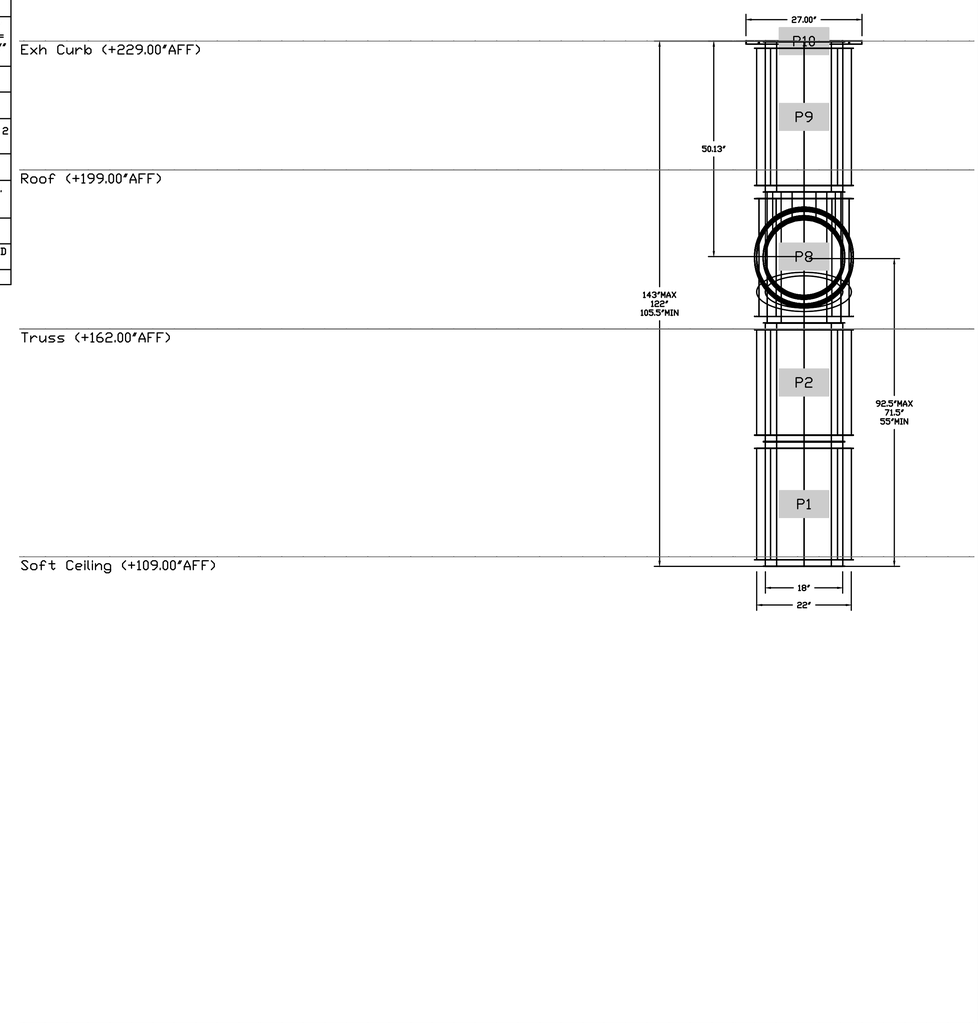

REVISIONS

DESCRIPTION	DATE:

CAPTIVEAIRE
www.captiveaire.com

Southern California Office
3002 Dow Ave., Suite 410, Tustin, CA 92780 PHONE: (714) 957-1500 FAX: (919) 227-5975 EMAIL: reg86@captiveaire.com

Panda Express - Tampa FL (D8135)

, 0

DATE: 2/18/2021

DWG.#: 4748429

DRAWN BY: AH-86

SCALE: 3/4" = 1'-0"

MASTER DRAWING

SHEET NO. 8

PANDA EXPRESS CHINESE KITCHEN

PANDA RESTAURANT GROUP INC.
1683 Walnut Grove Ave.
Rosemead, California
91770
Telephone: 626.799.9898
Facsimile: 626.372.8288

All ideas, designs, arrangement and plans indicated or represented by this drawing are the property of Panda Express Inc. and were created for use on this specific project. None of these ideas, designs, arrangements or plans may be used by or disclosed to any person, firm, or corporation without the written permission of Panda Express Inc.

REVISIONS:

ISSUE DATE:

1	04.29.2021 ISSUE FOR PERMIT
2	06.04.2021 ISSUE FOR BID

DRAWN BY: SDT

PANDA PROJECT #: - S8-22-D8135
C&P PROJECT #: - 2200775

Cuhaci & Peterson
Architects Engineers Planners
2600 Maitland Center Pkwy. Maitland, FL 32751
P (407) 661-9100
F (407) 661-9101
www.cp.com
Florida Corporate Certificate #AA C000526

06.04.2021

PANDA EXPRESS

TRUE WARM AND WELCOME 2300
SKYBROOKE BOULEVARD & STATE ROAD 54
LUTZ, FL 33558

M-407

HOOD DETAIL PLAN

TRUE WARM & WELCOME 2300 R4

DUCTWORK #1 SIDE VIEW

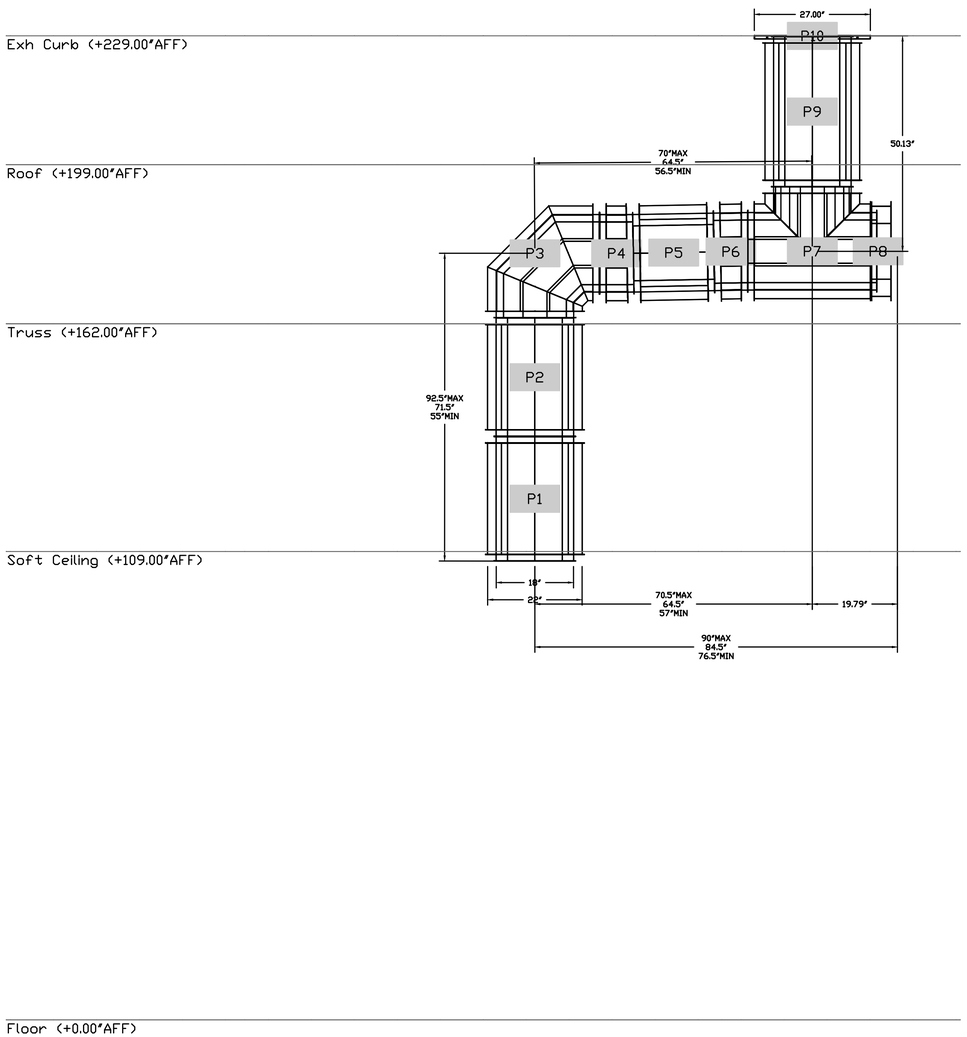

DUCTWORK #1 TOP VIEW

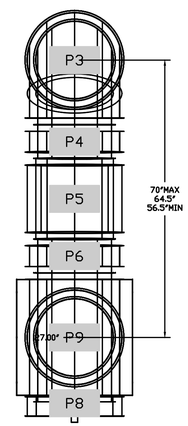

DUCTWORK #1 SE VIEW

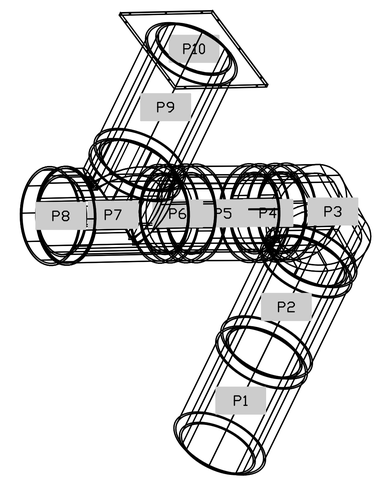

PRE-FABRICATED DOUBLE WALL ROUND DUCT IS AVAILABLE AS AN ALTERNATE
HVAC CONTRACTOR OR GENERAL CONTRACTOR TO CONTACT REGION 86 @
714-957-1500 OR REG86@CAPTIVEAIRE.COM FOR DESIGN AND PRICING

REVISIONS

DESCRIPTION	DATE:

CAPTIVEAIRE

www.captiveaire.com

Southern California Office

3002 Dow Ave., Suite 410, Tustin, CA 92780 PHONE: (714) 957-1500 FAX: (919) 227-5975 EMAIL: reg86@captiveaire.com

Panda Express - Tampa FL (D8135)

DATE: 2/18/2021

DWG.#: 4748429

DRAWN BY: AH-86

SCALE: 3/4" = 1'-0"

MASTER DRAWING

SHEET NO. 9

PANDA EXPRESS CHINESE KITCHEN

PANDA RESTAURANT GROUP INC.
1683 Walnut Grove Ave.
Rosemead, California
91770
Telephone: 626.799.9898
Facsimile: 626.372.8288

All ideas, designs, arrangement and plans indicated or represented by this drawing are the property of Panda Express Inc. and were created for use on this specific project. None of these ideas, designs, arrangements or plans may be used by or disclosed to any person, firm, or corporation without the written permission of Panda Express Inc.

REVISIONS:

ISSUE DATE:

1	04.29.2021 ISSUE FOR PERMIT
2	06.04.2021 ISSUE FOR BID

DRAWN BY: SDT

PANDA PROJECT #: - S8-22-D8135
C&P PROJECT #: - 2200775

Cuhaci & Peterson
Architects Engineers Planners
2600 Maitland Center Pkwy. Maitland, FL 32751
P (407) 661-9100
F (407) 661-9101
www.c-p.com
Florida Corporate Certificate #AA C000526

06.04.2021

PANDA EXPRESS

TRUE WARM AND WELCOME 2300
SKYBROOKE BOULEVARD & STATE ROAD 54
LUTZ, FL 33558

M-408

HOOD DETAIL PLAN

TRUE WARM & WELCOME 2300 R4

DUCTWORK #2 PARTS – JOB#4748429 DOUBLE WALL

TAG	PART #	CFM	SP	WEIGHT	VELOCITY	QTY	DESCRIPTION
P1	DW1829DWLT-2R-S			50.46		1	DOUBLE WALL DUCT - 18" INNER DUCT, 29" LONG - 2 LAYERS REDUCED CLEARANCE - 22" STAINLESS STEEL OUTER SHELL.
P2	DW1847DWAJD-2R-S			107.98		1	DOUBLE WALL ADJUSTABLE DUCT - 18" INNER DUCT - 2 LAYERS REDUCED CLEARANCE - 22" STAINLESS STEEL OUTER SHELL. MIN LENGTH = 11" / MAX LENGTH = 48.5" / ADJUSTMENT = 30.5" / ADJUSTABLE SECTION MAY NEED TO BE CUT. INCLUDES SINGLE AND DOUBLE WALL "V" CLAMPS.
P3	DW1890DWASY-2R-S			45.59		1	DOUBLE WALL DUCT - 18" INNER 90 DUCT - 2 LAYERS REDUCED CLEARANCE - 22" STAINLESS STEEL OUTER SHELL.
P4	DW1801DWOFFSETASY-2R-S			14.66		1	DOUBLE WALL DUCT - 18" INNER DUCT RISER & 1 DEGREE OFFSET - 2 LAYERS REDUCED CLEARANCE - 22" STAINLESS STEEL OUTER SHELL.
P5	DW1827DWAJD-2R-S			62.85		1	DOUBLE WALL ADJUSTABLE DUCT - 18" INNER DUCT - 2 LAYERS REDUCED CLEARANCE - 22" STAINLESS STEEL OUTER SHELL. MIN LENGTH = 11" / MAX LENGTH = 24.5" / ADJUSTMENT = 13.5" / ADJUSTABLE SECTION MAY NEED TO BE CUT. INCLUDES SINGLE AND DOUBLE WALL "V" CLAMPS.
P6	DW1801DWOFFSETASY-2R-S			14.66		1	DOUBLE WALL DUCT - 18" INNER DUCT RISER & 1 DEGREE OFFSET - 2 LAYERS REDUCED CLEARANCE - 22" STAINLESS STEEL OUTER SHELL.
P7 ASSEMBLED W/P8	DW18DWTEASY-2R-S			55.68		1	DOUBLE WALL DUCT - 18" INNER TEE DUCT - 2 LAYERS REDUCED CLEARANCE - 22" STAINLESS STEEL OUTER SHELL.
P8 ASSEMBLED W/P7 D=S	DW18DWACCDOORCOV-2R-S			26.16		1	DOUBLE WALL DUCT - 18" INNER ACCESS DOOR & 22" ACCESS DOOR COVER WITH CLAMPS - 2 LAYERS REDUCED CLEARANCE - 22" STAINLESS STEEL OUTER SHELL.
P9 ASSEMBLED W/P10	DW1835DWLTTP-2R-S			58.74		1	DOUBLE WALL DUCT - 18" INNER DUCT, 35" LONG - 2 LAYERS REDUCED CLEARANCE - 22" STAINLESS STEEL OUTER SHELL - USED WITH TRANSITION PLATES
P10 ASSEMBLED W/P9	DW2618TPDBEX			9.00		1	DUCT TO CURB TRANSITION 3/4" DOWN TURN, 26 1/2" CURB TO 18" DUCT, 16 GA ALUMINIZED. USED ON NCA16FA / NCA16HPFA & NCA18FA / NCA18HPFA. TRANSITION PLATE OD IS 27.00" DESIGNED FOR USE WITH EXHAUST FAN. NON-STANDARD PART.
	3M-2000PLUS			0.80		3	DUCT - 3M FIRE BARRIER 2000 PLUS SILICONE - USED AS SEALANT TO SEAL DUCT JOINTS.
	DW18DWCLASY-2R-S			8.70		4	DUCT - 18" DUCT - 22" DOUBLE "V" CLAMP - 2R INSULATION & SINGLE "V" CLAMP INCLUDED - REDUCED CLEARANCE.
TOTAL WEIGHT				482.98			

DOUBLE WALL FACTORY BUILT DUCTWORK

- ALL DUCTWORK IS REQUIRED TO BE INSTALLED WITH THE MAXIMUM SUPPORT SPACING LISTED BELOW.
- FOR A COMPLETE LIST OF APPROVED SUPPORT METHODS, SEE THE ENTIRE INSTALLATION AND OPERATION MANUAL
- DUCTWORK SHALL SLOPE NOT LESS THAN 1/16" PER LINEAR FOOT TOWARDS THE HOOD OR AN APPROVED GREASE COLLECTION RESERVOIR.
- WHERE HORIZONTAL DUCTS EXCEED 75 FEET IN LENGTH, THE SLOPE SHALL NOT BE LESS THAN 3/16" PER LINEAR FOOT.

HORIZONTAL	
DUCT DIAMETER	SUPPORT SPACING (FT)
5"	7'
6"	7'
7"	7'
8"	7'
10"	7'
12"	7'
14"	7'
16"	7'
18"	5'
20"	5'
22"	5'
24"	5'
26"	5'
28"	5'
30"	5'
32"	5'
34"	5'
36"	5'

VERTICAL			
TYPE	WALL SUPPORT (FT)	CURB SUPPORT (FT)	FLOOR SUPPORT (FT)
2R & 2R HT (5'-16')	20'	24'	24'
2R (18')	18'	24'	24'
3R & 3Z (5'-24')	10'	24'	24'
3Z (26' -36')	10'	20'	20'

DO NOT LEAK TEST USING SMOKE BOMBS CONTAINING CHLORINES/CHLORIDES. CONSULT WITH CAPTIVEAIRE FOR PROPER LEAK TESTING METHODS.

PRE-FABRICATED DOUBLE WALL ROUND DUCT IS AVAILABLE AS AN ALTERNATE HVAC CONTRACTOR OR GENERAL CONTRACTOR TO CONTACT REGION 86 @ 714-957-1500 OR REG86@CAPTIVEAIRE.COM FOR DESIGN AND PRICING

DUCTWORK #2 FRONT VIEW

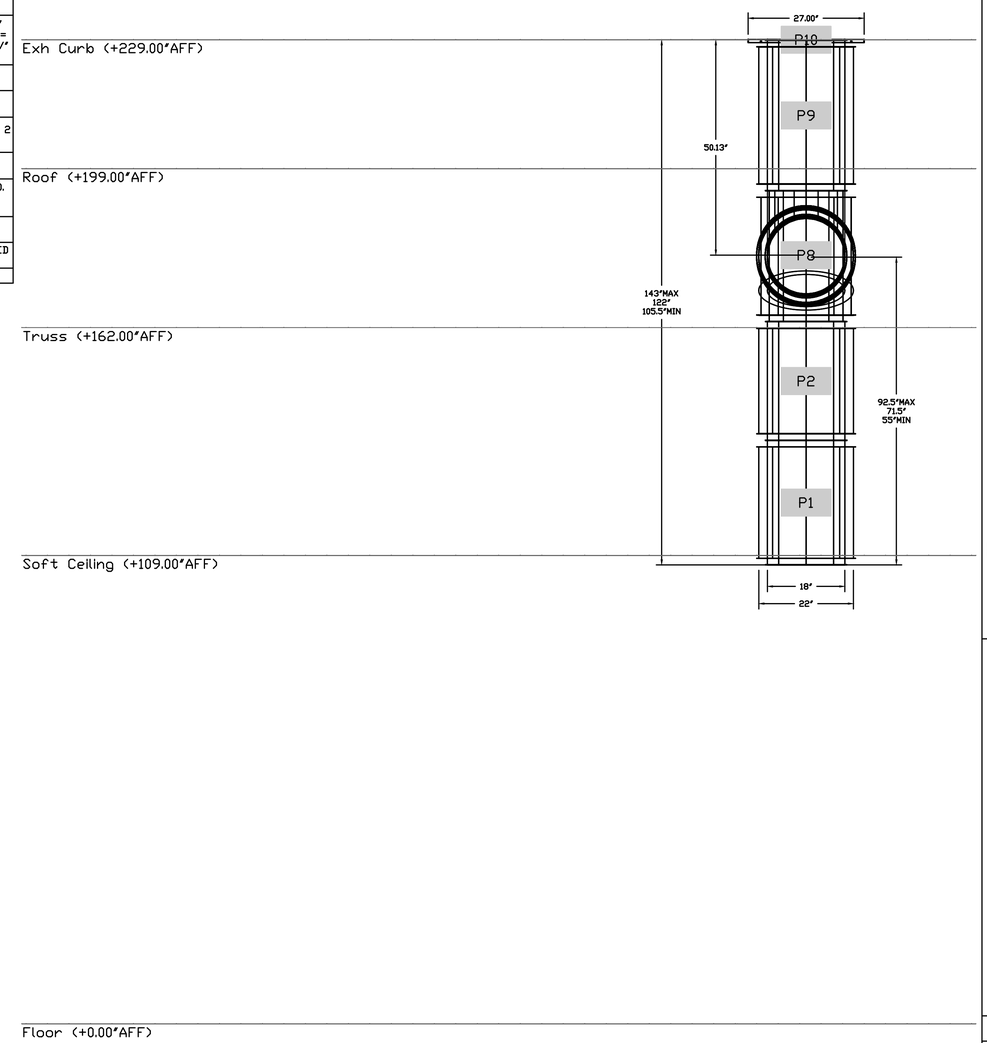

REVISIONS

DESCRIPTION	DATE:

CAPTIVEAIRE
www.captiveaire.com
Southern California Office
3002 Dow Ave., Suite 410, Tustin, CA, 92780 PHONE: (714) 957-1500 FAX: (919) 227-5975 EMAIL: reg86@captiveaire.com

Panda Express - Tampa FL (D8135)

DATE: 2/18/2021

DWG.#: 4748429

DRAWN BY: AH-86

SCALE: 3/4" = 1'-0"

MASTER DRAWING

SHEET NO. 10

PANDA EXPRESS CHINESE KITCHEN

PANDA RESTAURANT GROUP INC.
1683 Walnut Grove Ave.
Rosemead, California
91770
Telephone: 626.799.9898
Facsimile: 626.372.8288

All ideas, designs, arrangement and plans indicated or represented by this drawing are the property of Panda Express Inc. and were created for use on this specific project. None of these ideas, designs, arrangements or plans may be used by or disclosed to any person, firm, or corporation without the written permission of Panda Express Inc.

REVISIONS:

ISSUE DATE:

1	04.29.2021 ISSUE FOR PERMIT
2	06.04.2021 ISSUE FOR BID

DRAWN BY: SDT

PANDA PROJECT #: - S8-22-D8135
C&P PROJECT #: - 2200775

Cuhaci & Peterson
Architects Engineers Planners
2600 Maitland Center Pkwy. Maitland, FL 32751
P (407) 661-9100
F (407) 661-9101
www.c-p.com
Florida Corporate Certificate #AA C000526

06.04.2021

PANDA EXPRESS

TRUE WARM AND WELCOME 2300
SKYBROOKE BOULEVARD & STATE ROAD 54
LUTZ, FL 33558

M-409

HOOD DETAIL PLAN

TRUE WARM & WELCOME 2300 R4

DUCTWORK #2 SIDE VIEW

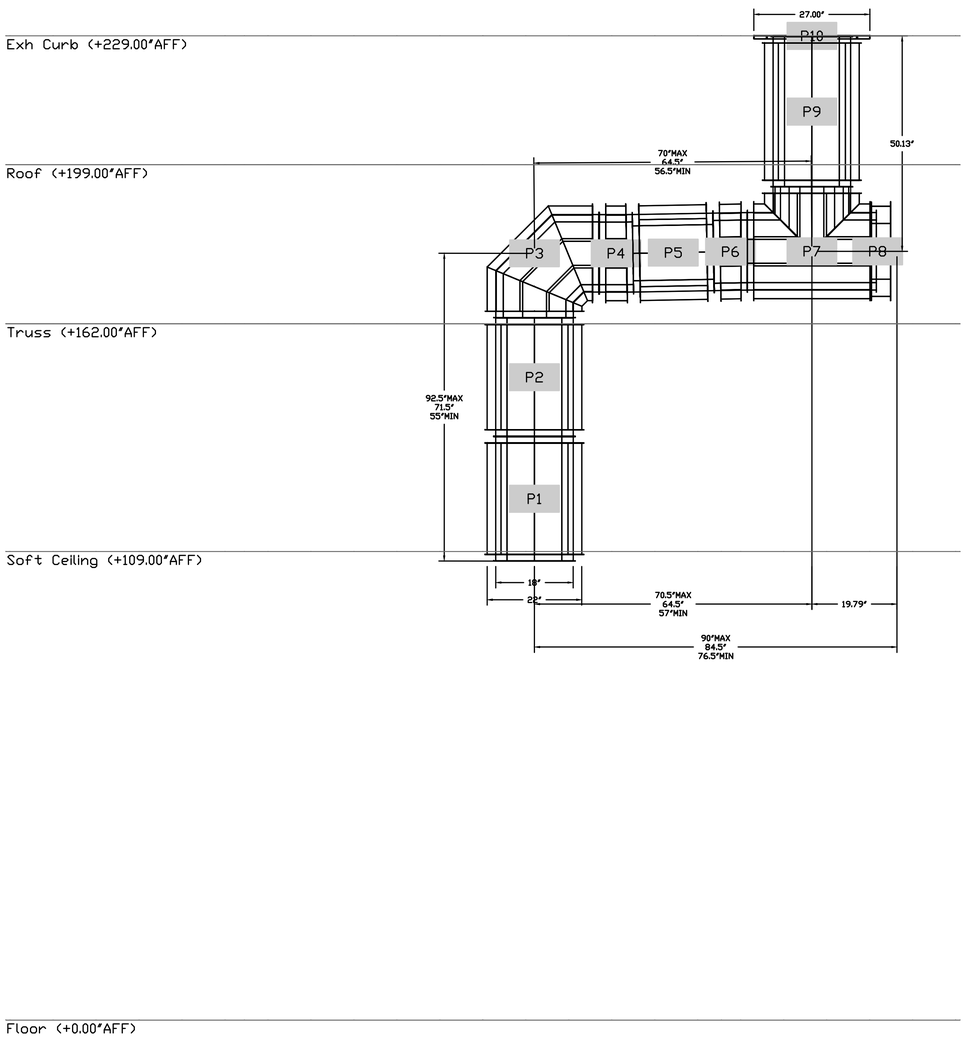

DUCTWORK #2 TOP VIEW

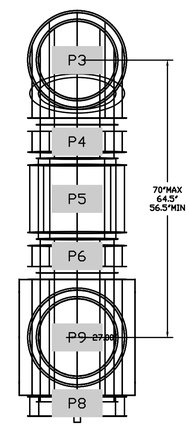

DUCTWORK #2 SE VIEW

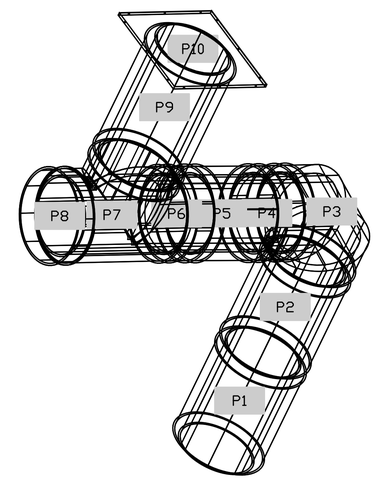

PRE-FABRICATED DOUBLE WALL ROUND DUCT IS AVAILABLE AS AN ALTERNATE HVAC CONTRACTOR OR GENERAL CONTRACTOR TO CONTACT REGION 86 @ 714-957-1500 OR REG86@CAPTIVEAIRE.COM FOR DESIGN AND PRICING

REVISIONS

	DESCRIPTION	DATE:
1		
2		
3		
4		

CAPTIVEAIRE

www.captiveaire.com

Southern California Office

3002 Dow Ave., Suite 410, Tustin, CA. 92780 PHONE: (714) 957-1500 FAX: (919) 227-5975 EMAIL: reg86@captiveaire.com

Panda Express - Tampa FL (D8135)

, 0

DATE: 2/18/2021

DWG.#: 4748429

DRAWN BY: AH-86

SCALE: 3/4" = 1'-0"

MASTER DRAWING

SHEET NO. 11

PANDA EXPRESS CHINESE KITCHEN

PANDA RESTAURANT GROUP INC.
1683 Walnut Grove Ave.
Rosemead, California
91770
Telephone: 626.799.9898
Facsimile: 626.372.8288

All ideas, designs, arrangement and plans indicated or represented by this drawing are the property of Panda Express Inc. and were created for use on this specific project. None of these ideas, designs, arrangements or plans may be used by or disclosed to any person, firm, or corporation without the written permission of Panda Express Inc.

REVISIONS:

ISSUE DATE:

1	04.29.2021 ISSUE FOR PERMIT
2	06.04.2021 ISSUE FOR BID

DRAWN BY: SDT

PANDA PROJECT #: - S8-22-D8135

C&P PROJECT #: - 2200775

Cuhaci & Peterson
Architects Engineers Planners
2600 Maitland Center Pkwy. Maitland, FL 32751
P (407) 661-9100
F (407) 661-9101
www.c-p.com
Florida Corporate Certificate AAA C000526

06.04.2021

PANDA EXPRESS

TRUE WARM AND WELCOME 2300
SKYBROOKE BOULEVARD & STATE ROAD 54
LUTZ, FL 33558

M-410

HOOD DETAIL PLAN

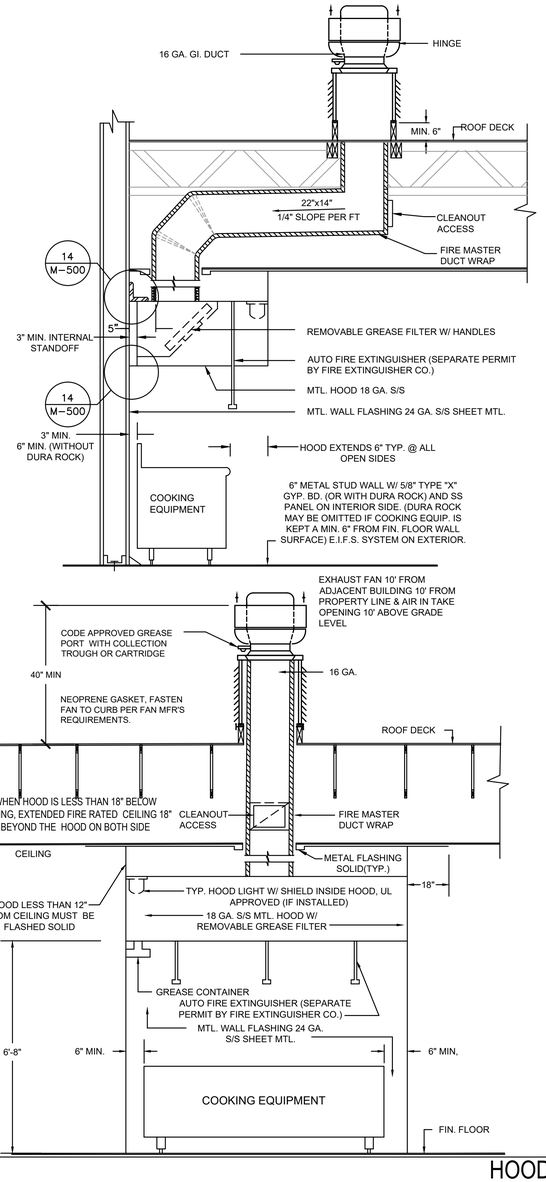

HOOD SECTIONS | 18

Scale: NO SCALE | M-500

PERFORMANCE TEST FOR LISTED MECHANICAL HOOD IS REQUIRED PER UMC 509.11

GREASE HOOD SYSTEM CALCULATION

1. TYPE : CANOPY TYPE I, STAINLESS STEEL 18 GAUGE.
2. COOKING EQUIPMENT: (2) CHINESE RANGE, (2) DEEP FRYER, RICE COOKER
3. SIZE: 23'-6" x 4'-0" + 2'-0" MAKEUP AIR PLENUM
4. MIN. REQ'D CAPACITY CFM: (2) U.L. LISTED HOOD @ 3,450 CFM EACH
5. PROPOSED (2) EXHAUST FAN & (1) MAKE-UP AIR UNIT. EF1 & EF2 (3,450 CFM EACH); MAU1 (5,520 CFM, 80% OF EXHAUST)
6. EXHAUST DUCT SIZE: 22"X14"
7. EXHAUST VELOCITY @ EXHAUST DUCT 3450/(22"x14"/144)=
   1612 FPM 1500FPM < 1612 FPM < 2500FPM
8. EXHAUST FAN (EF1 & EF2) AND MAKE-UP AIR UNIT (MAU1) SHALL BE ELECTRICALLY INTERLOCKED
9. FOR CODE COMPLIANCE SEE DETAIL
10. FOR FILTER INFORMATION SEE CAPTIVEAIRE DWG #M-400.
11. INTERLOCK RTU FANS TO OPERATE WITH KEF'S FOR MAKEUP AIR.

INFORMATIONAL GUIDE FOR COMMERCIAL COOKING HOODS

1. STAINLESS STEEL TO BE NO. 18 U.S. GAGE.
2. WHEN GUTTERS ARE PROVIDED THEY SHALL DRAIN TO A COLLECTING PAN WHICH IS READILY ACCESSIBLE FOR CLEANING
3. SEE TABLE 507.11 FOR MINIMUM DISTANCE BETWEEN LOWER EDGE OF GREASE FILTER AND THE COOKING OR HEATING SURFACE.
4. GREASE FILTERS SHALL BE OF STEEL CONSTRUCTION AND READILY ACCESSIBLE FOR CLEANING.
5. ALL JOINTS AND SEAMS SHALL BE GREASE TIGHT.
6. HOODS SHALL BE SECURELY FASTENED IN PLACE BY INCOMBUSTIBLE SUPPORTS.

NOTES

1. PROVIDE ADEQUATE CLEANOUT OPENINGS FOR THOROUGH CLEANING OF DUCT SYSTEM.
2. PROVIDE ADEQUATE MAKE-UP AIR FOR PROPER OPERATION.
3. PROVIDE A SEPARATE DUCT SYSTEM FOR EACH HOOD.
4. THICKNESS OF DUCTS SHALL BE:

DUCT AREA	U.S. GAGE STEEL
UP TO 4 SQ. FT.	16 GA
OVER 4 SQ. FT.	14 GA

5. WELD OR BRAZE ALL DUCT JOINTS AND SEAMS ON THE EXTERNAL SURFACE.
6. SUPPORT THE DUCTS AS REQUIRED. DO NOT PENETRATE DUCT WALLS WITH SCREWS, NAILS, ETC.
7. SECTIONS OF DUCT SHALL NOT CONTAIN GREASE POCKETS.

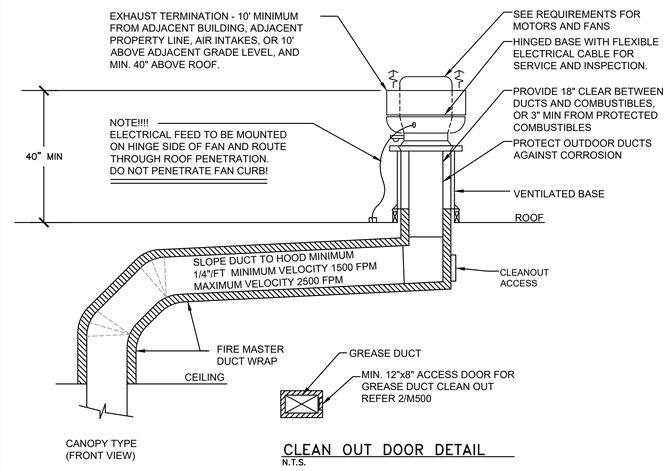

HOOD VENTILATION AND SECTION | 5

Scale: NO SCALE | M-500

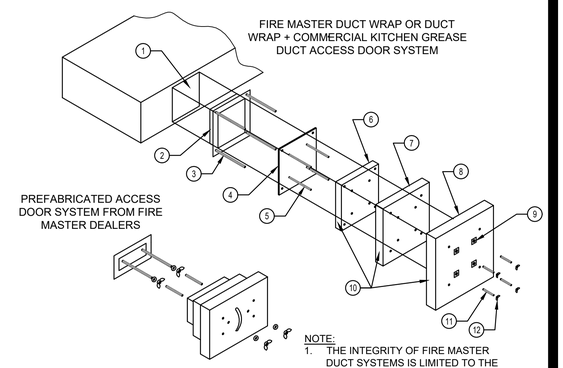

NOTE:
1. THE INTEGRITY OF FIRE MASTER DUCT SYSTEMS IS LIMITED TO THE QUALITY OF THE INSTALLATION.
2. REFER TO ICC EVALUATION REPORT 9424E.

FIRE MASTER DUCT WRAP or DUCT WRAP+	
1	DOOR HOLE
2	ACCESS FRAME WELDED TO DUCT
3	1/4" DIA. ALL THREAD RODS
4	ACCESS COVER - 16 GAUGE
5	INSULATION PINS - WELDED
6	ONE LAYER FIRE MASTER DUCT WRAP or DUCT WRAP +
7	ONE LAYER FIRE MASTER DUCT WRAP or DUCTWRAP + 1" OVERLAP
8	ONE LAYER FIRE MASTER DUCT WRAP or DUCTWRAP + 1" OVERLAP
9	SPEED CLIPS
10	ALUMINUM TAPE AT EDGES
11	SPOOL PIECES FOR THREADED RODS
12	1/4" DIA. WING NUTS

GREASE DUCT ACCESS DOOR | 2

M-500

NOTE:
GREASE EXHAUST DUCT INSULATION TYPE FIRE MASTER FASTWRAP+ + SILICON SEALANT APPROVED FOR 2-HOUR STRUCTURE.

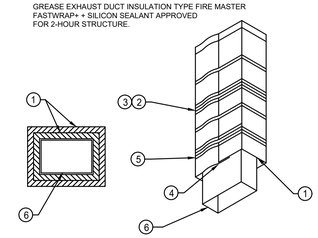

	LEGEND
1	TWO LAYERS FIRE MASTER FASTWRAP+
2	FILAMENT TAPE
3	BANDING
4	3-INCH PERIMETER OVERLAP
5	3-INCH LONGITUDINAL OVERLAP
6	GREASE DUCT

FOR SI: 1 INCH=25.4 MM — UL # GL-18

FIGURE 2-HOUR FIRE-RESISTIVE PROTECTION SYSTEM FOR GREASE DUCTS

2 HOUR GREASE DUCT WRAP | 1

Scale: NO SCALE | M-500

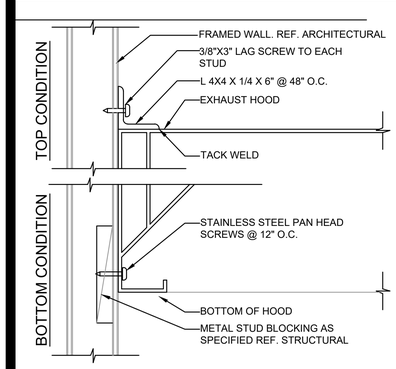

HOOD CLIP AT WALL | 14

Scale: NO SCALE | M-500

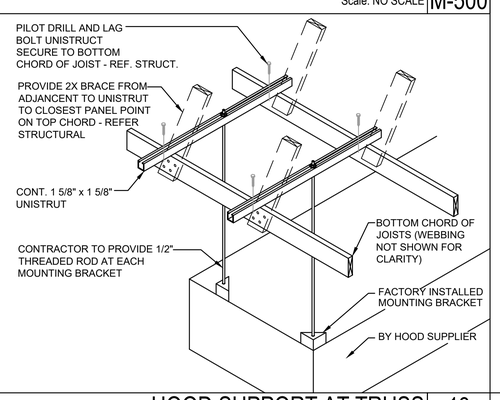

HOOD SUPPORT AT TRUSS | 13

Scale: NO SCALE | M-500

PANDA EXPRESS CHINESE KITCHEN

PANDA RESTAURANT GROUP INC.
1683 Walnut Grove Ave.
Rosemead, California
91770
Telephone: 626.799.9898
Facsimile: 626.372.8288

All ideas, designs, arrangement and plans indicated or represented by this drawing are the property of Panda Express Inc. and were created for use on this specific project. None of these ideas, designs, arrangements or plans may be used by or disclosed to any person, firm, or corporation without the written permission of Panda Express Inc.

REVISIONS:

ISSUE DATE:

1	04.29.2021 ISSUE FOR PERMIT
2	06.04.2021 ISSUE FOR BID

DRAWN BY: SDT

PANDA PROJECT #: - S8-22-D8135
C&P PROJECT #: - 2200775

Cuhaci & Peterson
Architects Engineers Planners
2600 Maitland Center Pkwy. Maitland, FL 32751
P (407) 661-9100
F (407) 661-9101
www.c-p.com
Florida Corporate Certificate #AA C000526

06.04.2021

PANDA EXPRESS
TRUE WARM AND WELCOME 2300
SKYBROOKE BOULEVARD & STATE ROAD 54
LUTZ, FL 33558

M-500

KITCHEN HOOD DETAILS

TRUE WARM & WELCOME 2300 R4

-	20
Scale: NO SCALE	M-501

-	16
Scale: NO SCALE	M-501

-	4
Scale: NO SCALE	M-501

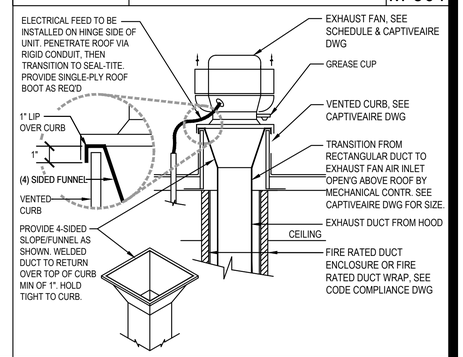

-	19
Scale: NO SCALE	M-501

-	15
Scale: NO SCALE	M-501

-	7
Scale: NO SCALE	M-501

GREASE EXHAUST FAN DETAIL	3
Scale: NO SCALE	M-501

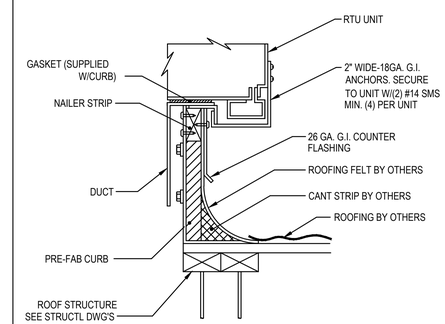

-	18
Scale: NO SCALE	M-501

-	14
Scale: NO SCALE	M-501

RTU UNIT CURB DETAIL	2
Scale: NO SCALE	M-501

SEQUENCE OF OPERATIONS:
UPON ACTIVATION OF THE KITCHEN HOOD ANSUL SYSTEM, THE DRY CONTACT WITHIN THE HOOD CONTROL PANEL SHALL OPEN AND SEND A CONTROL SIGNAL FOR ROOFTOP UNIT SHUTDOWN. SHUTDOWN SHALL OCCUR VIA AN ISOLATION RELAY TO THE (3) ROOFTOP UNITS SUPPLYING MAKE-UP AIR TO THE HOOD. E.C. TO PROVIDE CABINET, RELAY, TRANSFORMER AND ALL NECESSARY CONDUIT AND WIRING IN ORDER TO PROVIDE A. COMPLETE, FULLY FUNCTIONING SYSTEM.

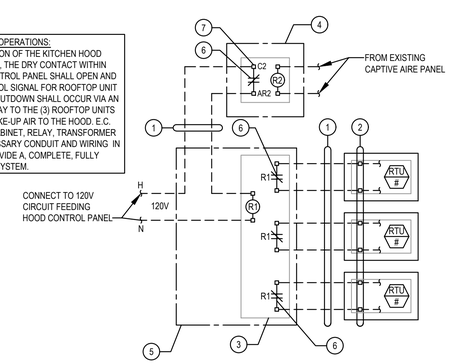

LEGEND

1. (2) #12 CONTROL WIRES IN 1/2" CONDUIT BY E.C.
2. M.C. TO CONNECT INTO REMOTE UNIT SHUTDOWN TERMINAL ON CARRIER ROOFTOP UNIT CONTROL BOARD AND REMOVE JUMPER. REFER TO MANUFACTURER FOR ADDITIONAL INFORMATION.
3. DPDT 120V RATED RELAY BY E.C. ENERGIZE FOR FAILSAFE OPERATION.
4. HOOD CONTROL PANEL AT KITCHEN.
5. 12X12X6 NEMA 1 CABINET MOUNTED ON WALL ADJACENT TO KITCHEN HOOD BY E.C.
6. N.O. DRY CONTACT (SHOWN ENERGIZED) THAT OPENS IN FIRE CONDITIONS.
7. 120V RATED DRY CONTACT WITHIN CAPTIVE AIRE PANEL.

-	17
Scale: NO SCALE	M-501

-	13
Scale: NO SCALE	M-501

RTU CONTROL WIRING DIAGRAM	5
Scale: NO SCALE	M-501

-	1
Scale: NO SCALE	M-501

PANDA RESTAURANT GROUP INC.
1683 Walnut Grove Ave.
Rosemead, California
91770
Telephone: 626.799.9898
Facsimile: 626.372.8288

All ideas, designs, arrangement and plans indicated or represented by this drawing are the property of Panda Express Inc. and were created for use on this specific project. None of these ideas, designs, arrangements or plans may be used by or disclosed to any person, firm, or corporation without the written permission of Panda Express Inc.

REVISIONS:

ISSUE DATE:

1	04.29.2021 ISSUE FOR PERMIT
2	06.04.2021 ISSUE FOR BID

DRAWN BY: SDT

PANDA PROJECT #: - S8-22-D8135
C&P PROJECT #: - 2200775

Cuhaci & Peterson
Architects Engineers Planners
2600 Maitland Center Pkwy. Maitland, FL 32751
P (407) 661-9100
F (407) 661-9101
www.cp.com
Florida Corporate Certificate AAA C000526

06.04.2021

PANDA EXPRESS

TRUE WARM AND WELCOME 2300
SKYBROOKE BOULEVARD & STATE ROAD 54
LUTZ, FL 33558

M-501

MECHANICAL DETAILS

TRUE WARM & WELCOME 2300 R4